INSTRUCTIONS FOR OPERATION AND ASSEMBLY

Electronic safety-sensor RSS 36-I2-SD-ST

Table of Contents

1 About this document
- 1.1 Function
- 1.2 Target group of the operating instructions: authorised qualified personnel
- 1.3 Explanation of the symbols used
- 1.4 Appropriate use
- 1.5 General safety instructions

2 Product description
- 2.1 Ordering code
- 2.2 Special versions
- 2.3 Purpose
- 2.4 Warning about misuse
- 2.5 Exclusion of liability

3 Technical Data

4 Mounting
- 4.1 General mounting instructions
- 4.2 Dimensions
- 4.3 Accessories
- 4.4 Switch distance
- 4.5 Adjustment

5 Electrical connection
- 5.1 General information for electrical connection
- 5.2 Serial diagnostic -SD
- 5.3 Wiring examples for series-wiring
- 5.4 Wiring configuration and connector accessories

6 Actuator coding

7 Working principle and diagnostic function
- 7.1 Mode of operation of the safety outputs
- 7.2 Diagnostic-LEDs
- 7.3 Operating principle of the electronic diagnostic output
- 7.4 Safety-sensors with serial diagnostic function

8 Set-up and maintenance

9 Disassembly and disposal
- 9.1 Disassembly
- 9.2 Disposal

1 About this document

The Schmersal range of products is not intended for private consumers.

1.1 Function

This document provides all the information you need for the mounting, set-up and commissioning to ensure the safe operation and disassembly of the switchgear. The operating instructions enclosed with the device must always be kept in a legible condition and accessible.

1.2 Target group of the operating instructions: authorised qualified personnel

All operations described in the operating instructions manual must be carried out by trained specialist personnel, authorised by the plant operator only.

Please make sure that you have read and understood these operating instructions and that you know all applicable legislations regarding occupational safety and accident prevention prior to installation and putting the component into operation.

The machine builder must carefully select the harmonised standards to be complied with as well as other technical specifications for the selection, mounting and integration of the components.

The information contained in this operating instructions manual is provided without liability and is subject to technical modifications.

1.3 Explanation of the symbols used

Information, hint, note: This symbol is used for identifying useful additional information.

Caution: Failure to comply with this warning notice could lead to failures or malfunctions.
Warning: Failure to comply with this warning notice could lead to physical injury and/or damage to the machine.

1.4 Appropriate use

The Schmersal range of products is not intended for private consumers.

The products described in these operating instructions are developed to execute safety-related functions as part of an entire plant or machine. It is the responsibility of the manufacturer of a machine or plant to ensure the correct functionality of the entire machine or plant.

The safety switchgear must be exclusively used in accordance with the versions listed below or for the applications authorised by the manufacturer. Detailed information regarding the range of applications can be found in the chapter "Product description".

1.5 General safety instructions

The user must observe the safety instructions in this operating instructions manual, the country specific installation standards as well as all prevailing safety regulations and accident prevention rules.

Further technical information can be found in the Schmersal catalogues or in the online catalogue on the Internet: products.schmersal.com.

2 Product description

2.1 Ordering code

Product type description: RSS 36 (1)-(2)-(3)-(4)

(1)	
without	Standard coding
I1	Individual coding
I2	Individual coding, multiple teaching

(2)	
without	without diagnostic function (only on request for ST5)
D	With diagnostic output
SD	with serial diagnostics (only for ST)

(3)	
without	Without latching
R	With latching, latching force approx. 18 N

(4)	
ST	Connector plug M12, 8-pole
ST5	Connector plug M12, 5-pole

2.2 Special versions

For special versions, which are not listed in the ordering code, these specifications apply accordingly, provided that they correspond to the standard version.

2.3 Purpose

This non-contact, electronic safety sensor is designed for application in safety circuits and is used for monitoring the position of movable safety guards. In this application, the safety sensor monitors the position of hinged, sliding or removable safety guards by means of the coded electronic actuator.

The safety function consists of safely switching off the safety outputs when the safety guard is opened and maintaining the safe switched off condition of the safety outputs for as long as the safety guard is open.

The safety switchgears are classified according to ISO 14119 as type 4 interlocking devices. Designs with individual coding are classified as highly coded.

Safety sensors and actuators with latching (ordering suffix 'R') always must be used in pairs. The latching force (approx. 18 N) exercised by the permanent magnet keeps hatches and small guards closed, also in a de-energised condition.
The system can be used as a door end stop up to 5 kg at 0.25 m/s.

The diagnostic output of the safety sensor alternatively can be used as a conventional output or as a “serial output“ with input and output channel.

Series-wiring
Series-wiring can be set up. In the case of a series connection, the risk time remains unchanged and the reaction time increases by the sum of the reaction time of the inputs per additional unit specified in the technical data. The quantity of devices is only limited by the cable drops and the external cable fuse protection, according to the technical data. Up to 31 device variants with serial diagnostics can be wired in series.

The user must evaluate and design the safety chain in accordance with the relevant standards and the required safety level. If multiple safety sensors are involved in the same safety function, the PFH values of the individual components must be added.

The entire concept of the control system, in which the safety component is integrated, must be validated to the relevant standards.

2.4 Warning about misuse

In case of improper use or manipulation of the safety switchgear, personal hazards or damages to machinery or plant components cannot be excluded. There are no residual risks, provided that the safety instructions as well as the instructions regarding mounting, commissioning, operation and maintenance are observed.

2.5 Exclusion of liability

We shall accept no liability for damages and malfunctions resulting from defective mounting or failure to comply with the operating instructions manual. The manufacturer shall accept no liability for damages resulting from the use of unauthorised spare parts or accessories.

For safety reasons, invasive work on the device as well as arbitrary repairs, conversions and modifications to the device are strictly forbidden, the manufacturer shall accept no liability for damages resulting from such invasive work, arbitrary repairs, conversions and/or modifications to the device.

3 Technical Data

Approvals - Standards

Certificates	TÜV cULus ECOLAB FCC IC UKCA ANATEL

General data

Standards	EN ISO 13849-1 EN IEC 60947-5-3 EN IEC 61508
Coding	Individual coding, multiple teaching
Coding level according to EN ISO 14119	High
Working principle	RFID
Frequency band RFID	125 kHz
Transmitter output RFID, maximum	-6 dB/m
Housing construction form	Block
Installation conditions (mechanical)	not flush
Sensor topology	Sensor for series wiring
Housing material	Glass-fibre, reinforced thermoplastic
Reaction time, maximum	100 ms
Duration of risk, maximum	200 ms
Reaction time, switching off safety outputs via actuator, maximum	100 ms
Reaction time, switching off safety outputs via safety inputs, maximum	0.5 ms
Gross weight	250 g

General data - Features

Serial diagnostics	Yes
Short circuit detection	Yes
Cross-circuit detection	Yes
Series-wiring	Yes
Safety functions	Yes
Cascadable	Yes
Integral system diagnostics, status	Yes
Number of LEDs	3
Number of semi-conductor outputs with signaling function	1
Number of fail-safe digital outputs	2
Number of series-wiring of sensors	31

Safety classification

Standards	EN ISO 13849-1 EN IEC 61508
Performance Level, up to	e
Category	4
PFH value	2.70 x 10^{-10} /h
PFD value	2.10 x 10^{-5}
Safety Integrity Level (SIL), suitable for applications in	3
Mission time	20 Year(s)

Mechanical data

Actuating panels	lateral
Active area	lateral
Mechanical life, minimum	1,000,000 Operations
Note (Mechanical life)	Actuating speed 0.25 m/s Operations for door weights ≤ 5 kg
Mounting	A screw length of 25 mm is sufficient for sensor mounting and for side mounting of the actuators. 30 mm long screws are recommended when the actuator is mounted upright and/or when the sealing discs are used.
Type of the fixing screws	2x M4 (cylinder head screws with washers DIN 125A / form A)
Tightening torque of the fixing screws, minimum	2.2 Nm
Tightening torque of the fixing screws, maximum	2.5 Nm

Mechanical data - Switching distances according EN IEC 60947-5-3

Switch distance, typical	12 mm
Assured switching distance "ON" S_{ao}	10 mm
Assured switching distance "OFF" S_{ar}	20 mm
Hysteresis (Switching distance), maximum	2 mm
Repeat accuracy R	0.5 mm
Note (Repeat accuracy R)	Axial offset: The long side allows for a maximum height misalignment (x) of sensor and actuator of 8 mm (e.g. mounting tolerance or due to guard door sagging). The axial misalignment (y) is max. ± 18 mm (see figure: Operating principle).Minimum clearance between two sensor systems 100 mm.

Mechanical data - Connection technique

Note (length of the sensor chain)	Cable length and cross-section change the voltage drop dependiing on the output current
Note (series-wiring)	Unlimited number of devices, oberserve external line fusing, max. 31 devices in case of serial diagnostic SD

Termination	Connector M12, 8-pole

Mechanical data - Dimensions

Length of sensor	22 mm
Width of sensor	106.3 mm
Height of sensor	25 mm

Ambient conditions

Degree of protection	IP65 IP67 IP69
Ambient temperature	-28 ... +70 °C
Storage and transport temperature	-28 ... +85 °C
Relative humidity, maximum	93 %
Note (Relative humidity)	non-condensing non-icing
Resistance to vibrations	10 … 55 Hz, amplitude 1 mm
Restistance to shock	30 g / 11 ms
Protection class	III
Permissible installation altitude above sea level, maximum	2,000 m

Ambient conditions - Insulation values

Rated insulation voltage U_i	32 VDC
Rated impulse withstand voltage U_{imp}	0.8 kV
Overvoltage category	III
Degree of pollution	3

Electrical data

Operating voltage	24 VDC -15 % / +10 % (stabilised PELV power supply)
Operating current, minimum	0.5 mA
No-load supply current I_0, typical	35 mA
Rated operating voltage	24 VDC
Operating current	600 mA
Required rated short-circuit current	100 A
Time to readiness, maximum	2,000 ms
Switching frequency, maximum	1 Hz
Electrical fuse rating, maximum	2 A

Electrical data - Safety digital inputs

Designation, Safety inputs	X1 and X2
Current consumption of the safety inputs	5 mA
Test pulse duration, maximum	1 ms
Test pulse interval, minimum	100 ms
Classification ZVEI CB24I, Sink	C1
Classification ZVEI CB24I, Source	C1 C2 C3

Electrical data - Safety digital outputs

Designation, Safety outputs	Y1 and Y2
Rated operating current (safety outputs)	250 mA
Output current, (fail-safe output), maximum	0.25 A
Design of control elements	short-circuit proof, p-type
Voltage drop U_d, maximum	1 V
Leakage current I_r, maximum	0.5 mA
Voltage, Utilisation category DC-12	24 VDC
Current, Utilisation category DC-12	0.25 A
Voltage, Utilisation category DC-13	24 VDC
Current, Utilisation category DC-13	0.25 A
Test pulse interval, typical	1000 ms
Test pulse duration, maximum	0.3 ms
Classification ZVEI CB24I, Source	C2
Classification ZVEI CB24I, Sink	C1 C2

Electrical data - Serial diagnostic SD

Designation, Serial diagnostic SD	OUT
Operation current	150 mA
Design of control elements	short-circuit proof, p-type
Wiring capacitance	50 nF

Electrical data - Electromagnetic compatibility (EMC)

Interfering radiation	IEC 61000-6-4

Status indication

Note (LED switching conditions display)	LED yellow: Operating condition LED green: Supply voltage LED red: Fault

Pin assignment

PIN 1	1A1 Ue: (1)
PIN 2	X1 Safety input 1
PIN 3	A2 GND Blue
PIN 4	Y1 Safety output 1 Black
PIN 5	serial diagnostic output OUT Grey
PIN 6	X2 Safety input 2 violet
PIN 7	Y2 Safety output 2 red
PIN 8	IN serial diagnostic input Pink

FCC/IC - Note

This device complies with Part 15 of the FCC Rules and contains licence-exempt transmitter/receivers that are compliant with ISED (Innovation, Science and Economic Development) Canada licence-exempt RSS standard(s). Operation is subject to the following two conditions:
(1) This device may not cause harmful interference signals, and
(2) This device must be able to tolerate interference signals. These also include interference signals that could cause the device to function improperly.
This device complies with the nerve stimulation limits (ISED SPR-002) when operated at a minimum distance of 100 mm. Changes or modifications not expressly approved by K.A. Schmersal GmbH & Co. KG could void the user's authority to operate the equipment.

The licence-free transmitter/receiver contained in this device satisfies the requirements of the "Radio Standards Specification" of the Innovation, Science and Economic Development Canada (ISED) authority that apply to licence-free radio equipment. Operation is permissible under the following two conditions:
(1) The device must not create disturbances.
(2) The device must tolerate received radio frequency interference, even if this could impair its functionality.
This device complies with the nerve stimulation limits (ISED CNR-102) when operated at a minimum distance of 100 mm.
In the event of changes or modifications that have not been expressly approved by K.A. Schmersal GmbH & Co. KG, the user's authorisation to use the device may become ineffective.

ANATEL 20941-22-14519	Este equipamento nao tem direito àprotecao contra interferência prejudicial e nao pode causar interferencia em sistemas devidamente autorizados. Para maiores informacores consultar: **www.gov.br/anatel**

4 Mounting

4.1 General mounting instructions

Please observe the relevant requirements of the standards ISO 12100, ISO 14119 and ISO 14120.

Ensure the safety sensor and actuator is mounted on a flat surface. The component can be mounted in any position. The universal mounting holes provide for a variable mounting by means of M4 screws. Mounting: a screw length of 25 mm is sufficient for sensor mounting and for side mounting of the actuators. 30 mm long screws are recommended when the actuator is mounted upright and/or when the sealing discs are used. (Tightening torque 2,2...2,5 Nm). The labelled surfaces of the safety sensor and the actuator have to be opposite. The safety sensor must only be used within the assured switching distances ≤ sao and ≥ sar.

To avoid any interference inherent to this kind of system and any reduction of the switching distances, please observe the following guidelines:

- The presence of metal chips in the vicinity of the sensor is liable to modify the switching distance.
- Keep away from metal chips
- Minimum distance 100 mm between two safety sensors as well as other systems with same frequency (125 kHz)

The actuator must be permanently fitted to the safety guards and protected against displacement by suitable measures (tamperproof screws, gluing, drilling of the screw heads).

4.2 Dimensions

All measurements in mm.

Safety sensor

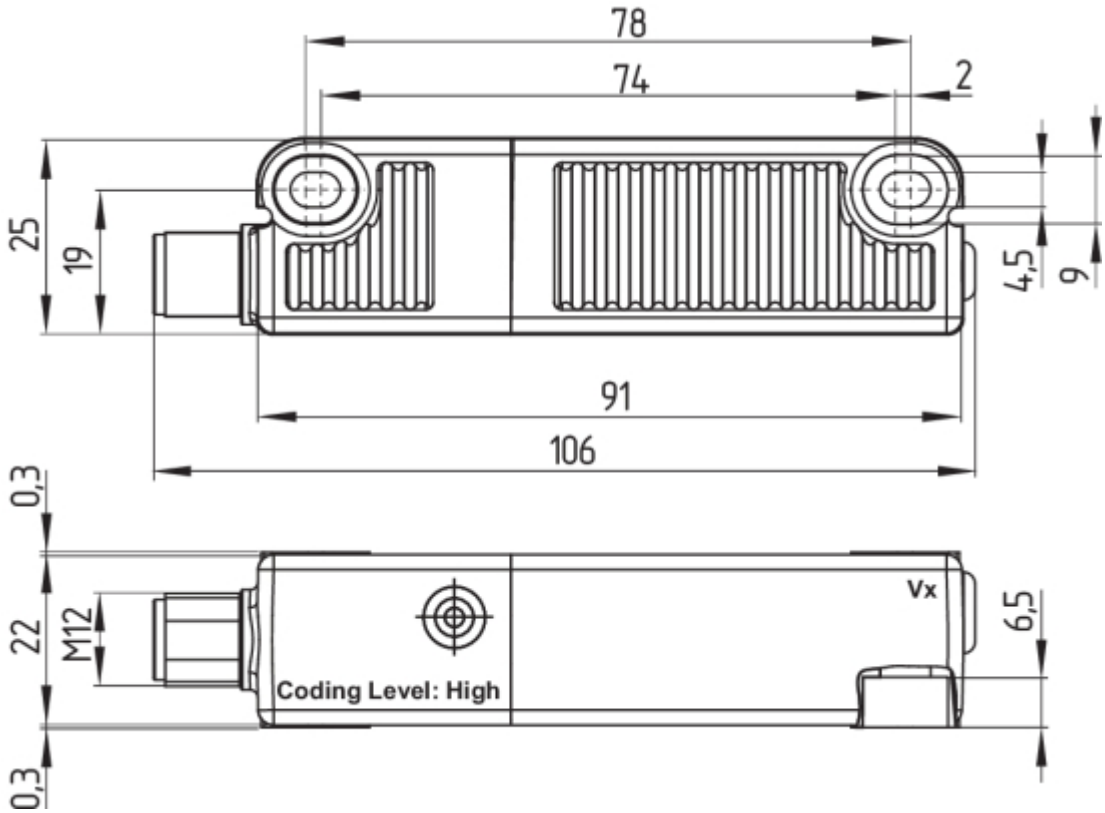

Actuator

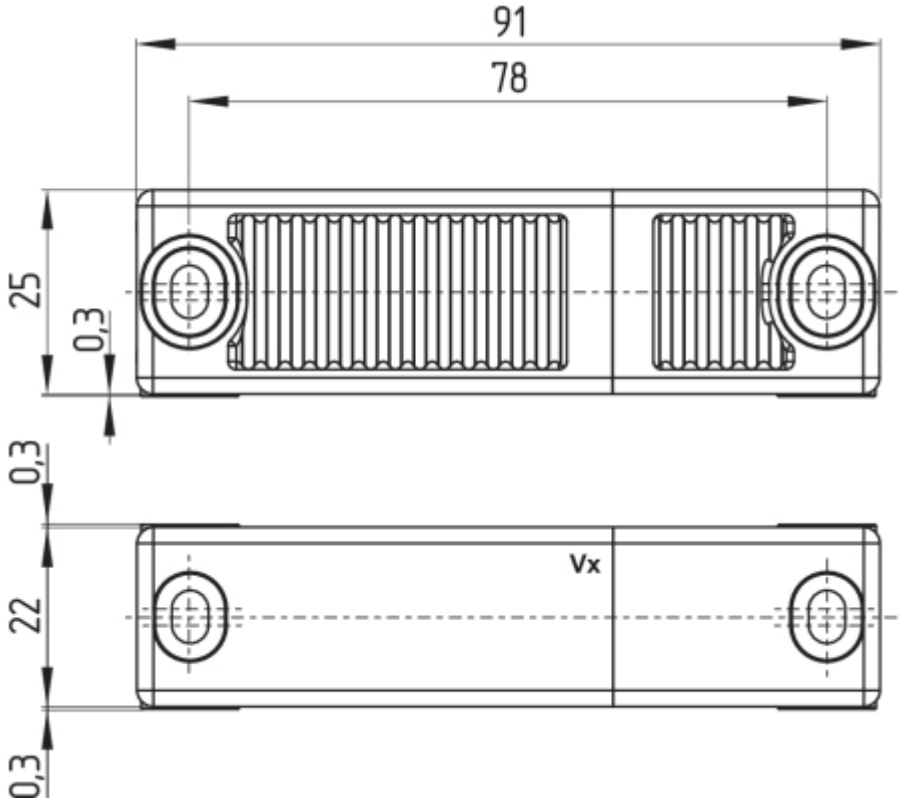

Alternative suitable actuators with different design: refer to products.schmersal.com.

4.3 Accessories

Set of disposable screws (order separately)
- 4x M4x25 incl. washers, order number 101217746
- 4x M4x30 incl. washers, Bestellnummer 101217747

Sealing kit (order separately)
- Order number 101215048
- 8 plugs and 4 under seals
- To seal the mounting holes and as a spacer (approx. 3 mm) to facilitate cleaning below the mounting surface
- Also suitable as tamper protection for the screw attachment

4.4 Switch distance

Switching distances in mm to IEC 60947-5-3	
Typical switching distance s_{typ}:	12
Assured switching distance s_{ao}:	10
Assured switch-off distance s_{ar}:	20

There are new switch distances as per the table below owing to the necessity of technical modifications (as of V2).
Please check the design of your guard system following installation to ensure adherence to the secured switch distances (≤ s_{ao} and ≥ s_{ar}) in accordance with the specified values and adjust the guard system accordingly.
The positions of the designations Vx should be obtained from the dimensional drawings.

Switching distances in mm to IEC 60947-5-3		Actuator RST	Actuator RST as of V2
Sensor RSS	s_{typ}	12	12
	s_{ao}	10	8
	s_{ar}	16	16
Sensor RSS as of V2	s_{typ}	12	12
	s_{ao}	10	10
	s_{ar}	20	20

With the combination of "old sensor - new actuator (as of V2)" there may be limitations in availability owing to the reduced s_{ao} (8 mm). This change has no affect on the performance level.

The side allows for a maximum height misalignment (X) of sensor and actuator of ± 8 mm (e.g. mounting tolerance or due to guard door sagging). The axial misalignment (y) is max. ± 18 mm.

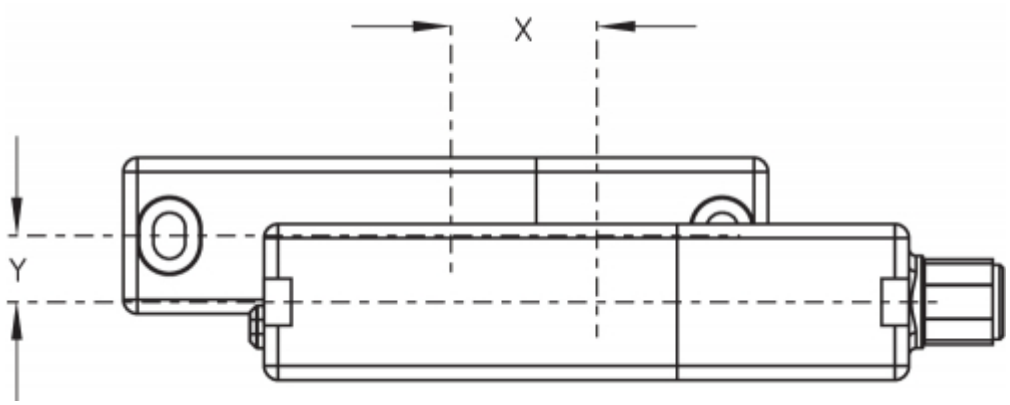

Latching versions X ± 5 mm, Y ± 3 mm.
The latching force will be reduced by misalignment.

Actuating curves
The actuating curves represent the typical switching distance of the safety sensor during the approach of the actuator subject to the actuating direction

Transverse misalignment	Height misalignment
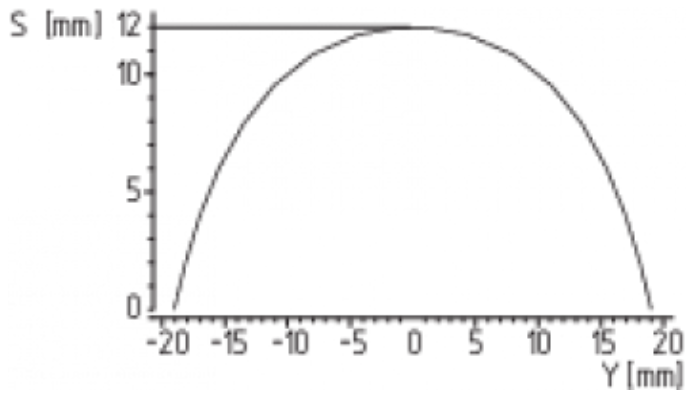	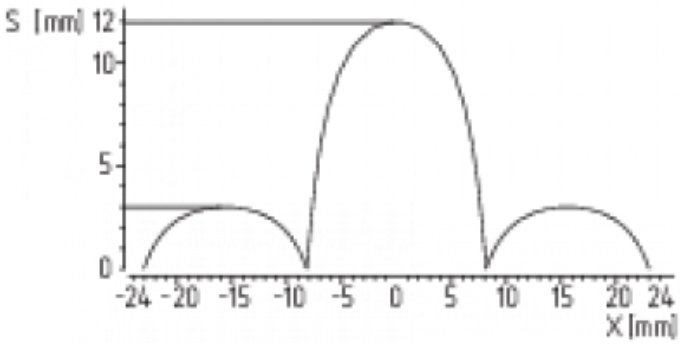

Preferred actuation directions: from front or from side

4.5 Adjustment

The continuous signal of the yellow LED signals the actuator detection; the flashing of the yellow LED signals that the safety sensor is actuated in the hysteresis area.

Recommended Adjustment
Align the safety sensor and actuator at a distance of 0.5 x s_{ao}.

The correct functionality of both safety channels must be checked by means of the connected safety-monitoring module.

5 Electrical connection

5.1 General information for electrical connection

The electrical connection may only be carried out by authorised personnel in a de-energised condition.

The safety outputs can be integrated into the safety circuit of the control system. For applications of PL e / category 4 to EN ISO 13849-1, the safety outputs of the safety sensor or of the sensor chain must be wired to a safety monitoring-module of the same category.

The required electrical cable fuse protection must be integrated in the installation.

Protection is not required when pilot wires are laid. The cables however must be separated from the supply and energy cables. The max. fuse rate for a sensor chain depends on the section of the connecting cable of the sensor.

Requirements for the connected safety-monitoring module:
dual-channel safety input, suitable for p-type sensors with NO function

Information for the selection of suitable safety-monitoring modules can be found in the Schmersal catalogues or in the online catalogue on the Internet: products.schmersal.com

As an alternative to a safety-monitoring module, the safety sensors of the CSS 34F0 or CSS 34F1 series can also be used as first sensor of a series-wired chain for the direct control and monitoring of safety contactors (refer to operating manual of CSS 34F0 / CSS 34F1).

The sensors cyclically switch off the safety output to test them. The safety-monitoring module therefore does not need to be equipped with a cross-wire short detection. The switch-off times must be tolerated by the safety-monitoring module. The switch -off time of the safety sensor is additionally extended depending on the cable length and the capacity of the cable used. Typically, a switch-off time of 250 µs is reached with a 30-m connecting cable.

Configuration of the safety-monitoring module
If the safety sensor is connected to electronic safety-monitoring modules, we recommend that you set a discrepancy time of min. 100 ms. The safety inputs of the safety-monitoring module must be able blanking a test impulse of approx. 1 ms. The safety-monitoring module does not need to have a cross-wire short monitoring function, if necessary, the cross-wire short monitoring function must be disabled.

5.2 Serial diagnostic -SD

Cable design
The wiring capacitance of the connecting cable of the safety sensor must not exceed 50 nF.
Depending on the strand structure, normal unshielded 200 m long control cables LIYY 0.25 mm² to 1.5 mm² have a wiring capacitance of approx. 20 … 50 nF

On wiring SD devices, please pay attention to the voltage drop on the cables and the current carrying capacity of the individual components.

Accessories for the series-wiring
For convenient wiring and series-wiring of SD components, the SD junction boxes PFB-SD-4M12-SD (variant for the field) and PDM-SD-4CC-SD (variant for control cabinet on carrier rail) are available along with additional comprehensive accessories. Detailed information is available on the Internet, products.schmersal.com.

5.3 Wiring examples for series-wiring

Series-wiring can be set up. In the case of a series connection, the risk time remains unchanged and the reaction time increases by the sum of the reaction time of the inputs per additional unit specified in the technical data. The number of components is only limited by the external cable protection according to the technical data and the line loss. Series-wiring of up to 31 RSS 36 … SD components with serial diagnostics is possible.
The application examples shown are suggestions. They however do not release the user from carefully checking whether the switchgear and its set-up are suitable for the individual application. The application examples shown are suggestions.

Wiring example 1: Series-wiring of the RSS 36 with conventional diagnostic output
The voltage is supplied to both safety inputs of the last safety sensor of the chain (considered from the safety-monitoring module).
The safety outputs of the first safety sensor are wired to the safety-monitoring module. The diagnostic output can be connected for instance to a PLC.

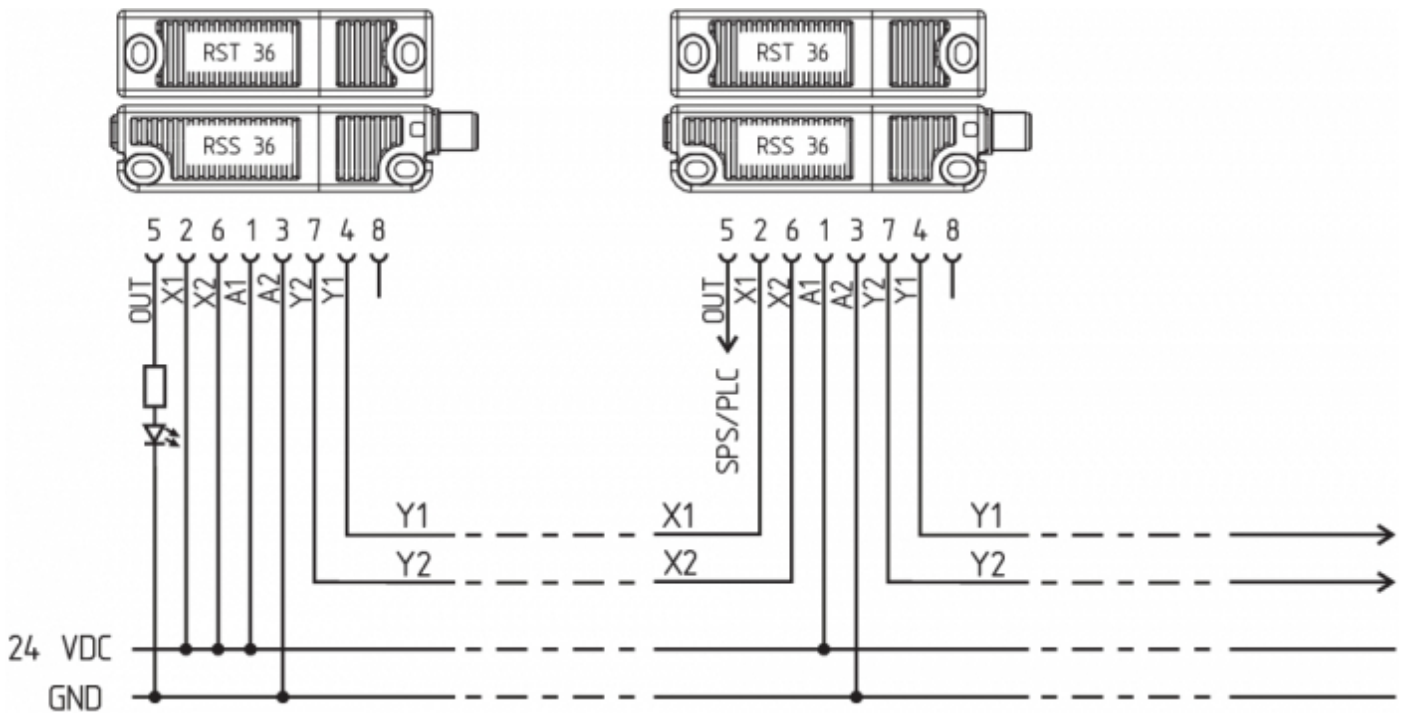

Y1 and Y2 = Safety outputs → Safety monitoring module

Wiring example 2: series-wiring of the RSS 36 with serial diagnostic function
In devices with the serial diagnostics function (ordering suffix -SD), the serial diagnostics connections are wired in series and connected to a SD-Gateway for evaluation purposes. The voltage is supplied to both safety inputs of the last safety sensor of the chain (considered from the safety-monitoring module).
The safety outputs of the first safety sensor are wired to the safety-monitoring module. The serial Diagnostic Gateway is connected to the serial diagnostic input of the first safety sensor.

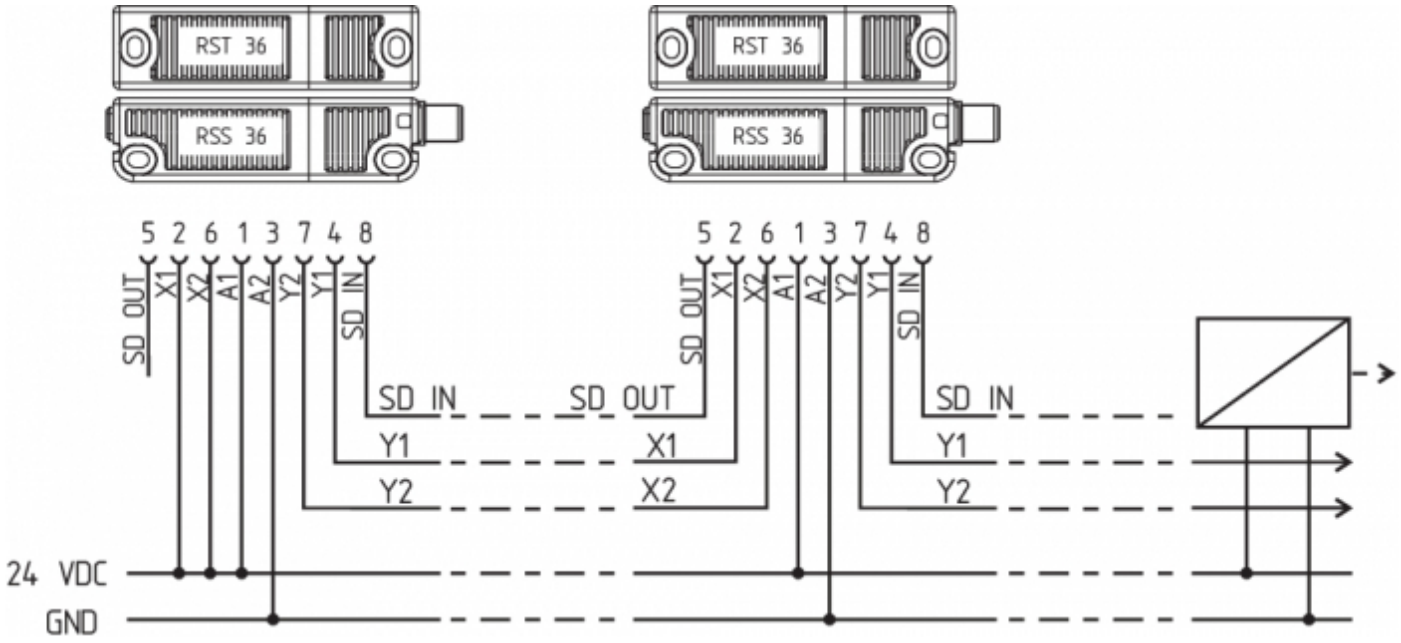

Y1 and Y2 = Safety outputs → Safety monitoring module
SD-IN → Gateway → Field bus

5.4 Wiring configuration and connector accessories

Function safety switchgear			Pin configuration of the connector		Colour codes of the Schmersal connectors			Poss. colour codes of other customary connectors
			8-pin version ST	**5-pin version ST**	**8-pin version ST**		**5-pin version ST**	**to IEC 60947-5-2: 2007**
	with conventional diagnostic outpu	**with serial diagnostic function**			**IP67 / IP69 (PUR)**	**IP69 (PVC)**	**IP67 / IP69 (PUR)**	
A1	Ue		1	1	WH	BN	BN	BN
X1	Safety input 1		2		BN	WH		WH
A2	GND		3	3	GN	BU	BU	BU
Y1	Safety output 1		4	4	YE	BK	BK	BK
OUT	Diagnoseausgang	SD-output	5	5	GY	GY	GY	GY
X2	Safety input 2		6		PK	VT		PK
Y2	Safety output 2		7	2	BU	RD	WH	VT
IN	without function	SD-input	8		RD	PK		OR

Connecting cables with coupling (female) IP67 / IP69, M12, 8-pole - 8 x 0.25 mm² to DIN 47100	
Cable length	**Ordering code**
2,5 m	103011415
5,0 m	103007358
10,0 m	103007359
15,0 m	103011414

Connecting cables (PVC) with socket (female) M12, 8-pole - 8 x 0.21 mm², IP69	
Cable length	**Ordering code**
5.0 m	101210560
5.0 m, angled	101210561
10.0 m	103001389
15.0 m	103014823

Connecting cables (PUR) with coupling (female) IP67 / IP69, M12, 5-pole - 5 x 0.34 mm² to EN 60947-5-2	
Cable length	**Ordering code**
5.0 m	103010816
10.0 m	103010818
15.0 m	103010820

6 Actuator coding

Safety sensors with standard coding are ready to use upon delivery.

Individually coded safety sensors and actuators will require the following "teach-in" procedure:

1. Energise the safety sensor.
2. Introduce the actuator in the detection range. The teach-in procedure is signalled at the safety sensor, red LED on, yellow LED flashes (1 Hz).
3. After 10 seconds, brief yellow cyclic flashes (3 Hz) request the switch-off of the operating voltage of the safety sensor. (If the voltage is not switched off within 5 minutes, the safety sensor cancels the "teach-in" procedure and signals a false actuator by 5 red flashes.)
4. Once the operating voltage is switched back on, the actuator must be detected once more in order to activate the actuator code that has been taught in. In this way, the activated code is definitively saved.

For ordering suffix -I1, the executed allocation of safety switchgear and actuator is irreversible.
For ordering suffix -I2, the "teach-in" procedure for a new actuator can be repeated an unlimited number of times. When a new actuator is taught, the code, which was applicable until that moment, becomes invalid. Subsequent to that, an enabling inhibit will be active for ten minutes, thus providing for an increased protection against tampering. The green LED will flash until the expiration of the time of the enabling inhibit and the detection of the new actuator. In case of power failure during the lapse of time, the 10-minutes tampering protection time will restart.

7 Working principle and diagnostic function

7.1 Mode of operation of the safety outputs

The safety outputs can be integrated into the safety circuit of the control system.
The opening of a safety guard, i.e. the actuator is removed out of the active zone of the sensor, will immediately disable the safety outputs of the sensor.

7.2 Diagnostic-LEDs

The safety sensor indicates the operating condition and faults by means of three-colour LEDs located in the lateral surfaces of the sensor.

> The following LED indicators are the same for safety sensors with conventional diagnostic output as for those with a serial diagnostic function.

The green LED indicates that the safety sensor is ready for operation. The supply voltage is on and all safety inputs are present.
Flashing (1Hz) of the green LED signals that a voltage is missing on one or both of the safety inputs (X1 and/or X2).
The yellow LED always signals the presence of an actuator within range. If the actuator is operating in the limit area of the sensor switching distance, it will be indicated by flashing.
The flashing can be used to prematurely detect variations in the clearance between the sensor and the actuator (e.g. sagging of a safety guard). The sensor must be adjusted before the distance to the actuator increases and before the safety outputs are disabled, thus stopping the machine. If an error is detected, the red LED will be activated.

LED indication (red)		Error cause
1 flash pulse		Error output Y1
2 flash pulses		Error output Y2
3 flash pulses		Cross-wire Y1/Y2
4 flash pulses		ambient temperature too high
5 flash pulses		Wrong or defective actuator
Continuous red		Internal fault, with yellow flashing teaching procedure

7.3 Operating principle of the electronic diagnostic output

A diagnostic output additionally indicates the switching condition of the safety switchgear. These signals can be used in a downstream control.

The short-circuit proof diagnostic output OUT can be used for central visualisation or control tasks, e.g. in a PLC.

The diagnostic output is not a safety-related output.

Error
Errors which no longer guarantee the function of the safety switchgear (internal errors) cause the safety outputs to

be disabled within the duration of risk. After fault rectification, the error message is reset by opening and re-closing the corresponding safety guard.

Error warning

A fault that does not immediately endanger the safety function of the safety switchgear (e.g. too high ambient temperature, safety output at external potential, cross-circuit) leads to delayed shutdown. This signal combination, diagnostic output disabled and safety channels still enabled, can be used to stop the production process in a controlled manner.

An error warning is deleted when the cause of error is eliminated.

If the fault warning remains on for 30 minutes, the safety outputs are also switched off (red LED flashes).

Table 1: Examples of the diagnostic function of the safety-sensor with conventional diagnostic output							
Sensor function		**LED's**			**Diagnostic-output**	**Safety outputs**	**Comments**
		green	**red**	**yellow**		**Y1, Y2**	
I.	Supply voltage	On	Off	Off	0 V	0 V	Voltage on, no evaluation of the voltage quality
II.	actuated	Off	Off	On	24 V	24 V	The yellow LED always signals the presence of an actuator within range.
III.	Actuated, actuator in limit area	Off	Off	Flashes (1Hz)	24 V pulsed	24 V	The sensor must be adjusted before the distance to the actuator increases and before the safety outputs are disabled, thus stopping the machine.
IV.	Error warning, sensor actuated	Off	Flashes	Off	0 V	24 V	After 30 minutes if the error is not rectified
V.	Error	Off	Flashes	Off	0 V	0 V	Refer to table with flash codes
VI.	Teach actuator	Off	On	Flashes	0 V	0 V	Sensor in teaching mode
VII.	Protection time	Flashes	Off	Off	0 V	0 V	10 minutes pause after re-teaching
VIII.	Error in input circuit X1 and/or X2	Flashes (1Hz)	Off	Off	0 V	0 V	Example: door open; a door in the safety circuit upstream is also open.
IX.	Error in input circuit X1 and/or X2	Flashes (1Hz)	Off	On	24 V	0 V	Example: door closed, a door in the safety circuit upstream is open.

7.4 Safety-sensors with serial diagnostic function

Safety sensors with serial diagnostic cable have a serial input and output instead of the conventional diagnostic output. If RSS / CSS safety sensors are wired in series, the safety channels as well as the inputs and outputs of the diagnostic channels are wired in series.

Up to 31 safety switchgear devices can be connected in series with serial diagnostics. For the evaluation of the serial diagnostics line either the PROFIBUS-Gateway SD-I-DP-V0-2 or the Universal-Gateway SD-I-U-... are used. This SD-Gateway is integrated as a slave in an existing field bus system. In this way, the diagnostic signals can be evaluated by means of a PLC. The necessary software for the integration of the SD-Gateway is available for download at products.schmersal.com.

The response data and the diagnostic data are automatically and permanently written in the assigned input byte of the PLC for each safety sensor in the series-wired chain.
The request data for each safety sensor are transmitted to the device through an output byte of the PLC.
In the event of a communication error between the SD-Gateway and the safety sensor, the switching condition of the safety output of the safety sensor is maintained.

Bit 0: safety outputs enabled
Bit 1: safety sensor actuated, actuator identified
Bit 4: both safety inputs live
Bit 5: safety sensor actuated in hysteresis area
Bit 6: error warning, switch-off delay activated
Bit 7: error, safety outputs switched off

Error
Errors which no longer guarantee the function of the safety switchgear (internal errors) cause the safety outputs to be disabled within the duration of risk. The fault is reset, when the cause is eliminated and bit 7 of the request byte changes from 1 to 0 or the safety guard is opened. Faults at the safety outputs are only deleted upon the next release, as the fault rectification cannot be detected sooner.

Error warning
A fault that does not immediately endanger the safety function of the safety switchgear (e.g. too high ambient temperature, safety output at external potential, cross-circuit) leads to delayed shutdown. This signal combination, diagnostic output disabled and safety channels still enabled, can be used to stop the production process in a controlled manner.
An error warning is deleted when the cause of error is eliminated.
If the fault warning remains on for 30 minutes, the safety outputs are also switched off (red LED flashes).

Diagnostic error (warning)
If an error (warning) is signalled in the response byte, detailed fault information can be read out.

Table 2: Function of the visual diagnostic LEDs, the serial status signals and the safety outputs by means of an example												
System condition	**LED's**			**Safety outputs**	**Status signals serial diagnostic byte Bit n°**							
	green	**red**	**yellow**	**Y1, Y2**	7	6	5	4	3	2	1	0
Non-actauted, inputs X1 and X2 enabled	On	Off	Off	0 V	0	0	0	1	0	0	0	0
Actuated, safety outputs enabled	Off	Off	On	24 V	0	0	0	1	0	0	1	1
Actuated in limit area	Off	Off	Flashes (1Hz)	24 V	0	0	1	1	0	0	1	1
Actuated, warning	Off	On/flashes	Off	24 V	0	1	0	1	0	0	1	1
Actuated, fault	Off	On/flashes	Off	0 V	1	1	0	1	0	0	1	0
The shown bit order of the diagnostic byte is an example. A different combination of the operational conditions will lead to a change of the bit order.												

Table 3: Tabular overview of status signals, warnings or error messages(The described condition is reached, when Bit = 1)				
Communication directions:	Request byte:	from the PLC to the local safety sensor		
	Response byte:	from the local safety sensor to the PLC		
	Warning/error byte:	from the local safety sensor to the PLC		
Bit n°	**Request byte**	**Response byte**	**Diagnostic**	
			Error warning	**Error messages**
Bit 0:	---	Safety output activated	Error output Y1	Error output Y1
Bit 1:	---	Actuator detected	Error output Y2	Error output Y2
Bit 2:	---	---	Cross-wire Y1/Y2	Cross-wire Y1/Y2
Bit 3:	---	---	Temperature too high	Temperature too high
Bit 4:	---	Input condition X1 and X2	---	Incorrect or defective actuator
Bit 5:	---	Actuated in limit area	Internal device error	Internal device error
Bit 6:	---	Error warning	Communication error between the field bus Gateway and the safety switchgear	---
Bit 7:	Error reset	Error (enabling path switched off)	---	---

8 Set-up and maintenance

The safety function of the safety components must be tested. In the case of correct installation and adequate use, the safety switchgear features maintenance-free functionality. A regular visual inspection and functional test, including the following steps, is recommended:

1. Check fixation of the safety switch and the actuator.
2. Fitting and integrity of the cable connections.
3. The system is free of dirt and soiling (in particular metal chips).

Adequate measures must be taken to ensure protection against tampering either to prevent tampering of the safety guard, for instance by means of replacement actuators.

Damaged or defective components must be replaced.

9 Disassembly and disposal

9.1 Disassembly

The safety switchgear must be disassembled in a de-energised condition only.

9.2 Disposal

The safety switchgear must be disposed of in an appropriate manner in accordance with the national prescriptions and legislations.

Schmersal India Pvt. Ltd., Plot No - G-7/1, Ranjangaon MIDC, Tal. - Shirur, Dist.- Pune 412 220
The details and data referred to have been carefully checked. Images may diverge from original. Further technical data can be found in the manual. Technical amendments and errors possible.
Generated on: 30/11/2024, 8:31 am