AVISOS PARA OPERACIÓN Y MONTAJE

Safety switch with separate actuator AZ 16 ZVRK-STR

Contenido

1 About this document
1.1 Function
1.2 Target group of the operating instructions: authorised qualified personnel
1.3 Explanation of the symbols used
1.4 Appropriate use
1.5 General safety instructions
2 Product description
2.1 Ordering code
2.2 Special versions
2.3 Purpose
2.4 Warning about misuse
2.5 Exclusion of liability
2.6 Technical Data
3 Mounting
3.1 General mounting instructions
3.2 Mounting of the actuator
3.3 Dimensions
4 Electrical connection
4.1 General information for electrical connection
4.2 Contact Options
5 Set-up and maintenance
6 Disassembly and disposal
6.1 Disassembly
6.2 Disposal

1 About this document

1.1 Function

This document provides all the information you need for the mounting, set-up and commissioning to ensure the safe operation and disassembly of the switchgear. The operating instructions enclosed with the device must always be kept in a legible condition and accessible.

1.2 Target group of the operating instructions: authorised qualified personnel

All operations described in the operating instructions manual must be carried out by trained specialist personnel, authorised by the plant operator only.

Please make sure that you have read and understood these operating instructions and that you know all applicable legislations regarding occupational safety and accident prevention prior to installation and putting the component into operation.

The machine builder must carefully select the harmonised standards to be complied with as well as other technical specifications for the selection, mounting and integration of the components.

The information contained in this operating instructions manual is provided without liability and is subject to technical modifications.

1.3 Explanation of the symbols used

Information, hint, note: This symbol is used for identifying useful additional information.

Caution: Failure to comply with this warning notice could lead to failures or malfunctions.
Warning: Failure to comply with this warning notice could lead to physical injury and/or damage to the machine.

1.4 Appropriate use

The Schmersal range of products is not intended for private consumers.

The products described in these operating instructions are developed to execute safety-related functions as part of an entire plant or machine. It is the responsibility of the manufacturer of a machine or plant to ensure the correct functionality of the entire machine or plant.

The safety switchgear must be exclusively used in accordance with the versions listed below or for the applications authorised by the manufacturer. Detailed information regarding the range of applications can be found in the chapter "Product description".

1.5 General safety instructions

The user must observe the safety instructions in this operating instructions manual, the country specific installation standards as well as all prevailing safety regulations and accident prevention rules.

Further technical information can be found in the Schmersal catalogues or in the online catalogue on the Internet: products.schmersal.com.

2 Product description

2.1 Ordering code

Product type description: AZ 16-(1)ZV(2)K-(3)-(4)-(5)

(1)	
without	1 NO contact/1 NC contact
02	2 NC contact
03	3 NC contact
12	1 NO contact/2 NC contacts

(2)	
without	Ejection force
R	Latching force 30 N

(3)	
G24	with LED (only available for version with one NO and one NC contact)

(4)	
M16	cable entry M16
M20	Cable entry M20
ST	Connector M12, 4 pole, bottom
STL	Connector M12, 4 pole, left
STR	Connector M12, 4 pole, right

(5)	
2254	Latching force 5 N
1762	Front mounting
1637	Gold-plated contacts

2.2 Special versions

For special versions, which are not listed in the ordering code, these specifications apply accordingly, provided that they correspond to the standard version.

2.3 Purpose

The safety switches with separate actuator are suitable for sliding, hinged and removable safety guards, which need to be closed in order to ensure the necessary operational safety.
The safety switches are used for applications, in which the hazardous situation is terminated without delay when the safety guard is opened.

When the safety guard is opened, the NC contacts are positively opened and the NO contacts are closed.

The safety switchgears are classified according to EN ISO 14119 as type 2 interlocking devices.

The user must evaluate and design the safety chain in accordance with the relevant standards and the required safety level.

The entire concept of the control system, in which the safety component is integrated, must be validated to the relevant standards.

2.4 Warning about misuse

In case of improper use or manipulation of the safety switchgear, personal hazards or damages to machinery or plant components cannot be excluded. There are no residual risks, provided that the safety instructions as well as the instructions regarding mounting, commissioning, operation and maintenance are observed.

2.5 Exclusion of liability

We shall accept no liability for damages and malfunctions resulting from defective mounting or failure to comply with the operating instructions manual. The manufacturer shall accept no liability for damages resulting from the use of unauthorised spare parts or accessories.

For safety reasons, invasive work on the device as well as arbitrary repairs, conversions and modifications to the device are strictly forbidden, the manufacturer shall accept no liability for damages resulting from such invasive work, arbitrary repairs, conversions and/or modifications to the device.

2.6 Technical Data

Aprobaciones - Normas

Certificados	cULus CCC

Propiedades Globales

Normas	EN ISO 13849-1 EN ISO 14119 EN IEC 60947-5-1
Nivel de codificación según EN ISO 14119	baja
Principio activo	electro-mecánico
Material de la caja	Plástico, termoplástico reforzado con fibra de vidrio, auto-extinguible
Peso bruto	130 g

Datos generales - Características

Nº de direcciones de actuación	3
Cantidad de contactos auxiliares	1
Cantidad de contactos de seguridad	1
Cantidad de prensa-estopas	3

Certificación de seguridad

Normas, normas	EN ISO 13849-1
Nivel de prestaciones (PL) hasta	c
Categoría de control según EN ISO 13849	1
B_{10D} Normally-closed contact (NC)	2.000.000 Maniobras
Note	Electrical life on request.
B_{10D} Normally-open contact (NO)	1.000.000 Maniobras
Note	at 10% I_e and ohmic load
Vida útil	20 Año(s)

Certificación de seguridad - Exclusión de errores

Notas importantes:	Se utiliza cuando una exclusión de errores de daño peligroso en un sistema de 1 canal esta autorizada y se asegura una protección adecuada contra manipulación.
Nivel de prestaciones (PL) hasta	d
Categoría de control según EN ISO 13849	3
Note	for 2-channel use and with suitable logic unit.
Vida útil	20 Año(s)

Datos mecánicos

Vida mecánica, mínima	1.000.000 Maniobras
Fuerza de retención	30 N
Recorrido de apertura forzada	8 mm
Positive break force per NC contact, minimum	10 N
Fuerza de apertura forzada, mínima	10 N
Velocidad de accionamiento, máxima	2 m/s
Montaje	Tornillos
Ejecución de los tornillos de fijación	2x M6

Datos mecánicos - Conexionado

Posición conector	A la derecha
Entrada de cables	M12 (codificación A)
Conexión conector	Conector empotrado M12, 4-polos, codificación A

Datos mecánicos - Dimensiones

Longitud del sensor	30 mm
Anchura del sensor	52 mm
Altura del sensor	90 mm

Condiciones ambientales

Protección	IP67
Ambient temperature	-30 ... +80 °C
Storage and transport temperature	-40 ... +85 °C
Altura de montaje snm permitida, máximo	2.000 m

Condiciones ambientales - Valores de aislamiento

Tensión de aislamiento nominal	500 V
Resistencia al impulso de sobretensión	6 kV
Categoría de sobre-tensión	III
Grado de polución según IEC/EN 60664-1	3
Rated impulse withstand voltage, connector 4-pole	2.5 kV

Datos eléctricos

Corriente continua térmica	10 A
Corriente de cortocircuito según EN 60947-5-1	1.000 A
Elemento de conmutación	1 contacto normalmente cerrado (NC), 1 contactos normalmente abierto (NA)
Principio de conmutación	slow action, positive break NC contact
Cadencia	4.000 /h
Material de los contactos, eléctricos	Plata

Datos eléctricos - Contactos de seguridad

Tensión, categoría de utilización AC-15	230 VAC
Corriente, categoría de utilización AC-15	4 A
Tensión, categoría de utilización DC-13	24 VDC
Corriente, categoría de utilización DC-13	4 A

Nota, categoría de utilización DC-13	Conector 4-polos

Datos eléctricos - Contactos auxiliares

Tensión, categoría de utilización AC-15	230 VAC
Corriente, categoría de utilización AC-15	4 A
Tensión, categoría de utilización DC-13	24 VDC
Corriente, categoría de utilización DC-13	4 A
Nota, categoría de utilización DC-13	Conector 4-polos

Note about the safety classification

Basically suitable up to Cat. 1 / PL c.
With 2-channel usage with fault exclusion mechanism (if a fault exclusion to the 1-channel mechanics is authorised) and suitable logic applicable up to Cat. 3 / PL d

$$MTTF_D = \frac{B_{10D}}{0{,}1 \times n_{op}} \qquad n_{op} = \frac{d_{op} \times h_{op} \times 3600\ s/h}{t_{cycle}}$$

(Determined values can vary depending on the application-specific parameters h_{op}, d_{op} and t_{cycle} as well as the load.)

If multiple safety components are wired in series, the Performance Level to EN ISO 13849-1 will be reduced due to the restricted error detection under certain circumstances.

3 Mounting

3.1 General mounting instructions

Please observe the relevant requirements of the standards ISO 12100, ISO 14119 and ISO 14120.

The mounting dimensions are indicated on the rear of the component. The enclosure must not be used as an end stop.
Any mounting position. The mounting position however must be chosen so that the ingress of dirt and soiling in the used opening is avoided. The unused openings must be sealed by means of slot sealing plugs (AZ 15/16 - 1476-1 available as accessory) after fitting.

3.2 Mounting of the actuator

See operating instructions Actuator.

The actuator must be permanently fitted to the safety guards and protected against displacement by suitable measures (tamperproof screws, gluing, drilling of the screw heads).

Actuating radii [mm]				
	over the small edge of the actuator		over the wide edge of the actuator	
	R_{min}	d	R_{min}	d
AZ 15/16-B2	-	-	45	11
AZ 15/16-B2-1747	-	-	45	11
AZ 15/16-B3	32	11	-	-
AZ 15/16-B3-1747	32	11	-	-
AZ 15/16-B6	25	11	38	11

3.3 Dimensions

All measurements in mm.

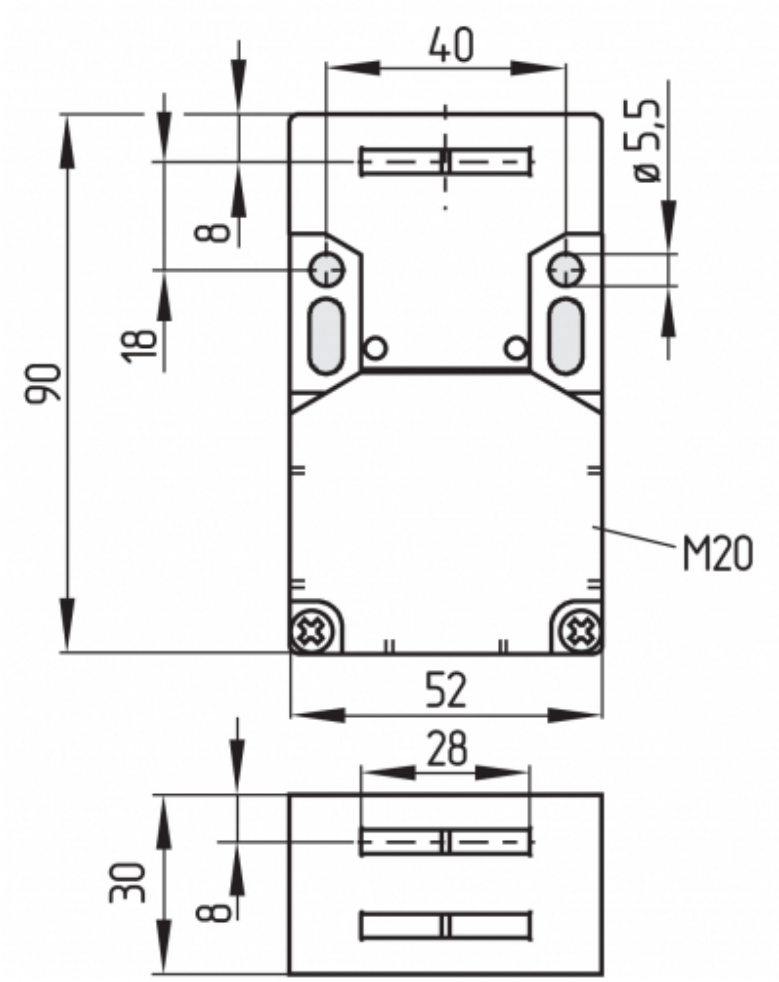

Front mounting

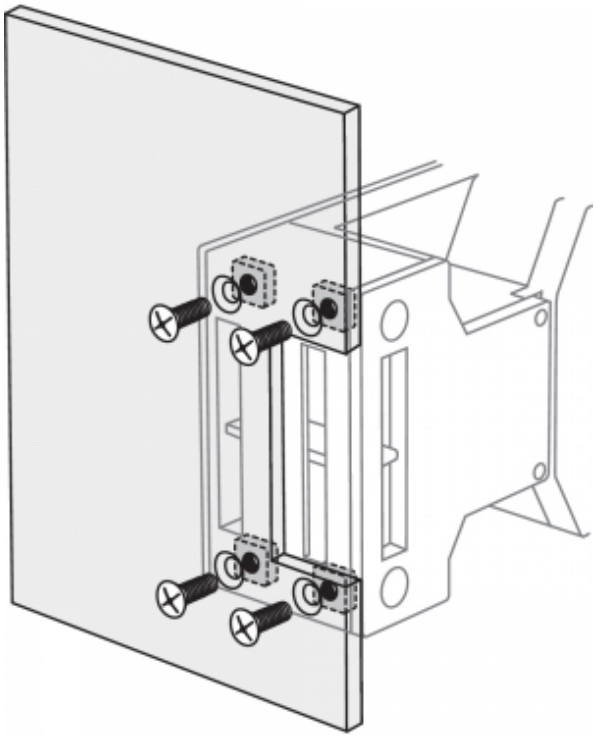

4 Electrical connection

4.1 General information for electrical connection

The electrical connection may only be carried out by authorised personnel in a de-energised condition.

The contact labelling can be found in the wiring compartment of the switch. Appropriate cable glands with a suitable degree of protection are to be used.

Settle length x of the conductor: 6 mm

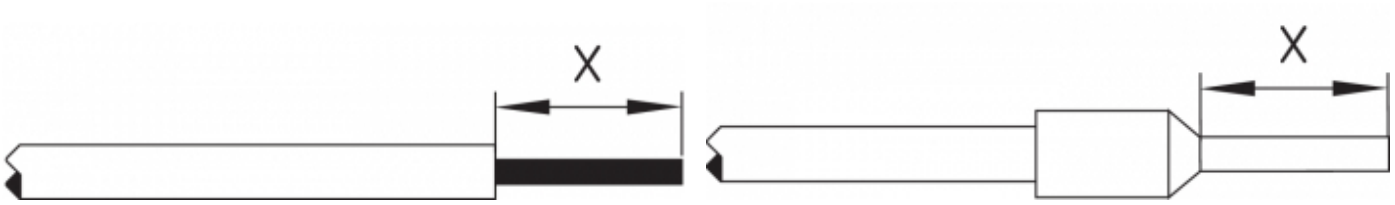

After wiring, dust and soiling must be removed from the wiring compartment. The safety switch is double insulated. The use of a protective ground connector therefore is not authorised.

4.2 Contact Options

Contacts are shown with safety guard closed. All NC contacts have positive break ⊖.

AZ 16ZV.K	AZ 16-02ZV.K	AZ 16-12ZV.K
		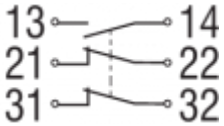

AZ 16-03ZV.K	AZ 16ZV.K-ST	AZ 16-02ZV.K-ST
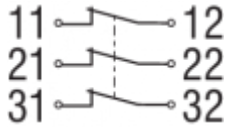	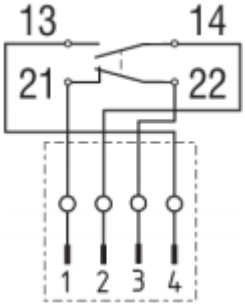	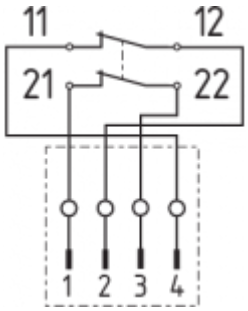

AZ 16-12ZV.K-ST	LED	LED
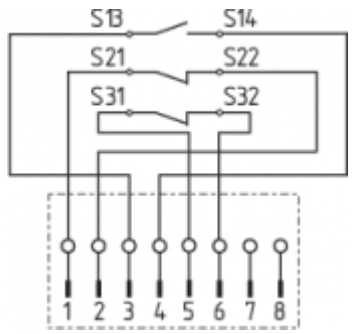	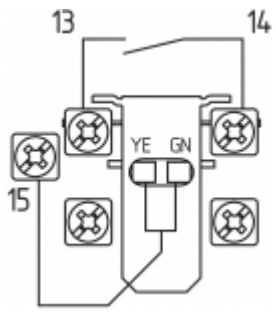	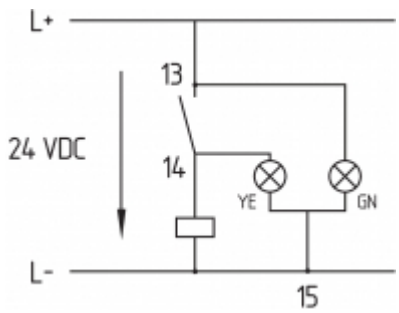

Key	
	Automatic opener, NC contact
	Normally-open contact
	Normally-closed contact

5 Set-up and maintenance

The safety function of the safety components must be tested. In the case of correct installation and adequate use, the safety switchgear features maintenance-free functionality. A regular visual inspection and functional test, including the following steps, is recommended:

1. Check for free movement of the actuating element
2. Check cable entry and connections
3. Check the switch enclosure for damage
4. Remove particles of dust and soiling

Adequate measures must be taken to ensure protection against tampering either to prevent tampering of the safety guard, for instance by means of replacement actuators.

Damaged or defective components must be replaced.

6 Disassembly and disposal

6.1 Disassembly

The safety switchgear must be disassembled in a de-energised condition only.

6.2 Disposal

The safety switchgear must be disposed of in an appropriate manner in accordance with the national prescriptions and legislations.

Schmersal Ibérica, S.L., Rambla P. Catalanes, Nº 12, 08800 Vilanova i la Geltrú
Los datos e información anteriores se han verificado cuidadosamente. Las imágenes pueden diferir del original. Se pueden encontrar más datos técnicos en los manuales de instrucciones. Sujeto a cambios técnicos y errores.
Generado a 23/3/2025 23:43