AVISOS PARA OPERACIÓN Y MONTAJE

Solenoid interlock AZM 161SK-12/12RKT-024

Contenido

1 About this document
1.1 Function
1.2 Target group of the operating instructions: authorised qualified personnel
1.3 Explanation of the symbols used
1.4 Appropriate use
1.5 General safety instructions
2 Product description
2.1 Ordering code
2.2 Special versions
2.3 Purpose
2.4 Warning about misuse
2.5 Exclusion of liability
2.6 Technical Data
3 Mounting
3.1 General mounting instructions
3.2 Dimensions
3.3 Manual release
3.4 Emergency release (ordering suffix -N)
3.5 Emergency Exit
4 Electrical connection
4.1 General information for electrical connection
4.2 Contact Options
5 Set-up and maintenance
6 Disassembly and disposal
6.1 Disassembly
6.2 Disposal

1 About this document

1.1 Function

This document provides all the information you need for the mounting, set-up and commissioning to ensure the safe operation and disassembly of the switchgear. The operating instructions enclosed with the device must always be kept in a legible condition and accessible.

1.2 Target group of the operating instructions: authorised qualified personnel

All operations described in the operating instructions manual must be carried out by trained specialist personnel, authorised by the plant operator only.

Please make sure that you have read and understood these operating instructions and that you know all applicable legislations regarding occupational safety and accident prevention prior to installation and putting the component into operation.

The machine builder must carefully select the harmonised standards to be complied with as well as other technical specifications for the selection, mounting and integration of the components.

The information contained in this operating instructions manual is provided without liability and is subject to technical modifications.

1.3 Explanation of the symbols used

Information, hint, note: This symbol is used for identifying useful additional information.

Caution: Failure to comply with this warning notice could lead to failures or malfunctions.
Warning: Failure to comply with this warning notice could lead to physical injury and/or damage to the machine.

1.4 Appropriate use

The Schmersal range of products is not intended for private consumers.

The products described in these operating instructions are developed to execute safety-related functions as part of an entire plant or machine. It is the responsibility of the manufacturer of a machine or plant to ensure the correct functionality of the entire machine or plant.

The safety switchgear must be exclusively used in accordance with the versions listed below or for the applications authorised by the manufacturer. Detailed information regarding the range of applications can be found in the chapter "Product description".

1.5 General safety instructions

The user must observe the safety instructions in this operating instructions manual, the country specific installation standards as well as all prevailing safety regulations and accident prevention rules.

Further technical information can be found in the Schmersal catalogues or in the online catalogue on the Internet: products.schmersal.com.

2 Product description

2.1 Ordering code

Product type description: AZM161 (1)-(2)(3)K(4)-(5)/(6)-(7)(8)

(1)	
SK	Screw connection
CC	Cage clamps
ST	Connector plug M12

(2)	
11/03	Magnet: 1 NO contact, 1 NC contact / Actuator: 3 NC contacts with connector plug
12/03	Magnet: 1 NO contact, 2 NC contact / Actuator: 3 NC contacts
12/11	Magnet: 1 NO contact, 2 NC contacts / Actuator: 1 NO contact, 1 NC contact with connector plug
11/12	Magnet: 1 NO contact, 1 NC contacts / Actuator: 1 NO contact, 2 NC contact with connector plug
12/12	Magnet: 1 NO contact, 2 NC contacts / Actuator: 1 NO contact, 2 NC contacts

(3)	
without	Latching force 5 N
R	Latching force 30 N

(4)	
without	Power to unlock
A	Power to lock

(5)	
without	Lateral manual release
ED	Manual release on the cover side
EU	Manual release on the back side

(6)	
T	Lateral emergency exit
TD	Emergency exit on the cover side
TU	Emergency exit on the back side
N	Emergency release

(7)

024	Us: 24 VAC/DC
110/230	Us: 110/230 VAC

(8)	
without	without LED
G	with LED (only for Us: 24 VAC/DC)

2.2 Special versions

For special versions, which are not listed in the ordering code, these specifications apply accordingly, provided that they correspond to the standard version.

2.3 Purpose

The solenoid interlock has been designed to prevent in conjunction with the control part of a machine, movable safety guards from being opened before hazardous conditions have been eliminated.

Interlocks with power to lock principle may only be used in special cases after a thorough evaluation of the accident risk, since the safety guard can be opened immediately on failure of the power supply or upon activation of the main switch.

The safety switchgears are classified according to EN ISO 14119 as type 2 interlocking devices.

The user must evaluate and design the safety chain in accordance with the relevant standards and the required safety level.

The entire concept of the control system, in which the safety component is integrated, must be validated to the relevant standards.

2.4 Warning about misuse

In case of improper use or manipulation of the safety switchgear, personal hazards or damages to machinery or plant components cannot be excluded. There are no residual risks, provided that the safety instructions as well as the instructions regarding mounting, commissioning, operation and maintenance are observed.

2.5 Exclusion of liability

We shall accept no liability for damages and malfunctions resulting from defective mounting or failure to comply with the operating instructions manual. The manufacturer shall accept no liability for damages resulting from the use of unauthorised spare parts or accessories.

For safety reasons, invasive work on the device as well as arbitrary repairs, conversions and modifications to the device are strictly forbidden, the manufacturer shall accept no liability for damages resulting from such invasive work, arbitrary repairs, conversions and/or modifications to the device.

2.6 Technical Data

Aprobaciones - Normas

Certificados	IFA cULus

Propiedades Globales

Normas	EN ISO 13849-1 EN ISO 14119 EN IEC 60947-5-1
Nivel de codificación según EN ISO 14119	baja
Principio activo	electro-mecánico
Material de la caja	Plástico, termoplástico reforzado con fibra de vidrio, auto-extinguible
Peso bruto	420 g

Datos generales - Características

Principio de desbloqueo por tensión	Sí
Dispositivo de desbloqueo de escape	Sí
Nº de direcciones de actuación	3
Cantidad de contactos auxiliares	2
Cantidad de contactos de seguridad	4

Certificación de seguridad

Normas, normas	EN ISO 13849-1
Nivel de prestaciones (PL) hasta	c
Categoría de control según EN ISO 13849	1
B_{10D} Normally-closed contact (NC)	2.000.000 Maniobras
Note	Electrical life on request.
B_{10D} Normally-open contact (NO)	1.000.000 Maniobras
Note	at 10% I_e and ohmic load
Vida útil	20 Año(s)

Certificación de seguridad - Exclusión de errores

Notas importantes:	Se utiliza cuando una exclusión de errores de daño peligroso en un sistema de 1 canal esta autorizada y se asegura una protección adecuada contra manipulación.
Nivel de prestaciones (PL) hasta	d
Categoría de control según EN ISO 13849	3
Note	for 2-channel use and with suitable logic unit.
Vida útil	20 Año(s)

Certificación de seguridad - Función de enclavamiento

Nivel de prestaciones (PL) hasta	e
Note (Performance Level)	Information for the safety classification of the guard locking function is documented in the "Operating instructions" or in the "Operation and mounting" instructions.

Datos mecánicos

Vida mecánica, mínima	1.000.000 Maniobras
Juego del actuador, en dirección del accionamiento	5,5 mm
Fuerza de bloqueo según EN ISO 14119	2.000 N
Fuerza de bloqueo, máxima	2.600 N
Fuerza de retención	30 N
Recorrido de apertura forzada	9,5 mm
Positive break force per NC contact, minimum	10 N
Fuerza de apertura forzada, mínima	20 N
Velocidad de accionamiento, máxima	2 m/s
Montaje	Tornillos
Ejecución de los tornillos de fijación	3x M5
Type of the screw head	Flat head screw
Tightening torque of the fastening screws for the housing cover	0,6 Nm
Note	The tightening sequence of the cover screws must be observed. This can be found in the attached drawing in the “Pictures” tab.

Datos mecánicos - Conexionado

Entrada de cables	4 x M16 x 1,5
Conexión conector	Conexionado por tornillos
Sección del cable, mínima	0,25 mm²
Sección del cable, máxima	1,5 mm²
Nota (sección del cable)	Todas las especificaciones con terminales grimpados incluidos.
Allowed type of cable	solid single-wire solid multi-wire flexible

Datos mecánicos - Dimensiones

Longitud del sensor	30 mm
Anchura del sensor	130 mm
Altura del sensor	90 mm

Condiciones ambientales

Protección	IP67
Ambient temperature	-30 ... +60 °C
Storage and transport temperature	-30 ... +85 °C
Nota (humedad relativa)	sin condensación sin escarcha
Grado de protección.	II
Altura de montaje snm permitida, máximo	2.000 m

Condiciones ambientales - Valores de aislamiento

Tensión de aislamiento nominal	250 VAC
Resistencia al impulso de sobretensión	4 kV

Datos eléctricos

Corriente continua térmica	6 A
Tensión nominal de alimentación	24 VAC/DC
Corriente de cortocircuito según EN 60947-5-1	1.000 A
Consumo de potencia eléctrica, máxima	10 W
Elemento de conmutación	Contacto normalmente abierto (NA), contacto normalmente cerrado (NC)
Principio de conmutación	slow action, positive break NC contact
Cadencia	1.000 /h
Material de los contactos, eléctricos	Plata

Datos eléctricos - Control del solenoide IN

Magnet switch-on time	100 %
Test pulse duration, maximum	5 ms
Test pulse interval, minimum	50 ms

Datos eléctricos - Contactos de seguridad

Tensión, categoría de utilización AC-15	230 VAC

Corriente, categoría de utilización AC-15	4 A
Tensión, categoría de utilización DC-13	24 VDC
Corriente, categoría de utilización DC-13	2,5 A

Datos eléctricos - Contactos auxiliares

Tensión, categoría de utilización AC-15	230 VAC
Corriente, categoría de utilización AC-15	4 A
Tensión, categoría de utilización DC-13	24 VDC
Corriente, categoría de utilización DC-13	2,5 A

Otros datos

Nota (aplicaciones)	Resguardo de seguridad, corredera Resguardo de seguridad, desmontable Resguardo de seguridad, pivotante

Note about the safety classification

- Safety classification of the interlocking function

Basically suitable up to Cat. 1 / PL c.
With 2-channel usage with fault exclusion mechanism (if a fault exclusion to the 1-channel mechanics is authorised) and suitable logic applicable up to Cat. 3 / PL d

$$MTTF_D = \frac{B_{10D}}{0{,}1 \times n_{op}} \qquad n_{op} = \frac{d_{op} \times h_{op} \times 3600\ s/h}{t_{cycle}}$$

(Determined values can vary depending on the application-specific parameters h_{op}, d_{op} and t_{cycle} as well as the load.)

If multiple safety components are wired in series, the Performance Level to EN ISO 13849-1 will be reduced due to the restricted error detection under certain circumstances.

- Safety classification of the guard locking function

If the device is used as an interlock for personal safety, a safety classification of the guard locking function is required. When classifying the interlock function, a distinction must be made between monitoring of the interlock function (locking function) and controlling the unlocking function. The following safety classification of the unlocking function is based on the application of the principle of safety energy disconnection for the solenoid supply.

The classification of the unlocking function is only valid for devices with monitored guard locking function and in the power to unlock version (see ordering code).

A fault exclusion for the guard locking function can be assumed by an external safety energy disconnection. In this case, the guard locking function does not have an effect on the failure probability of the unlock function. The safety level of the unlock function is determined exclusively by the external safety power shutdown.

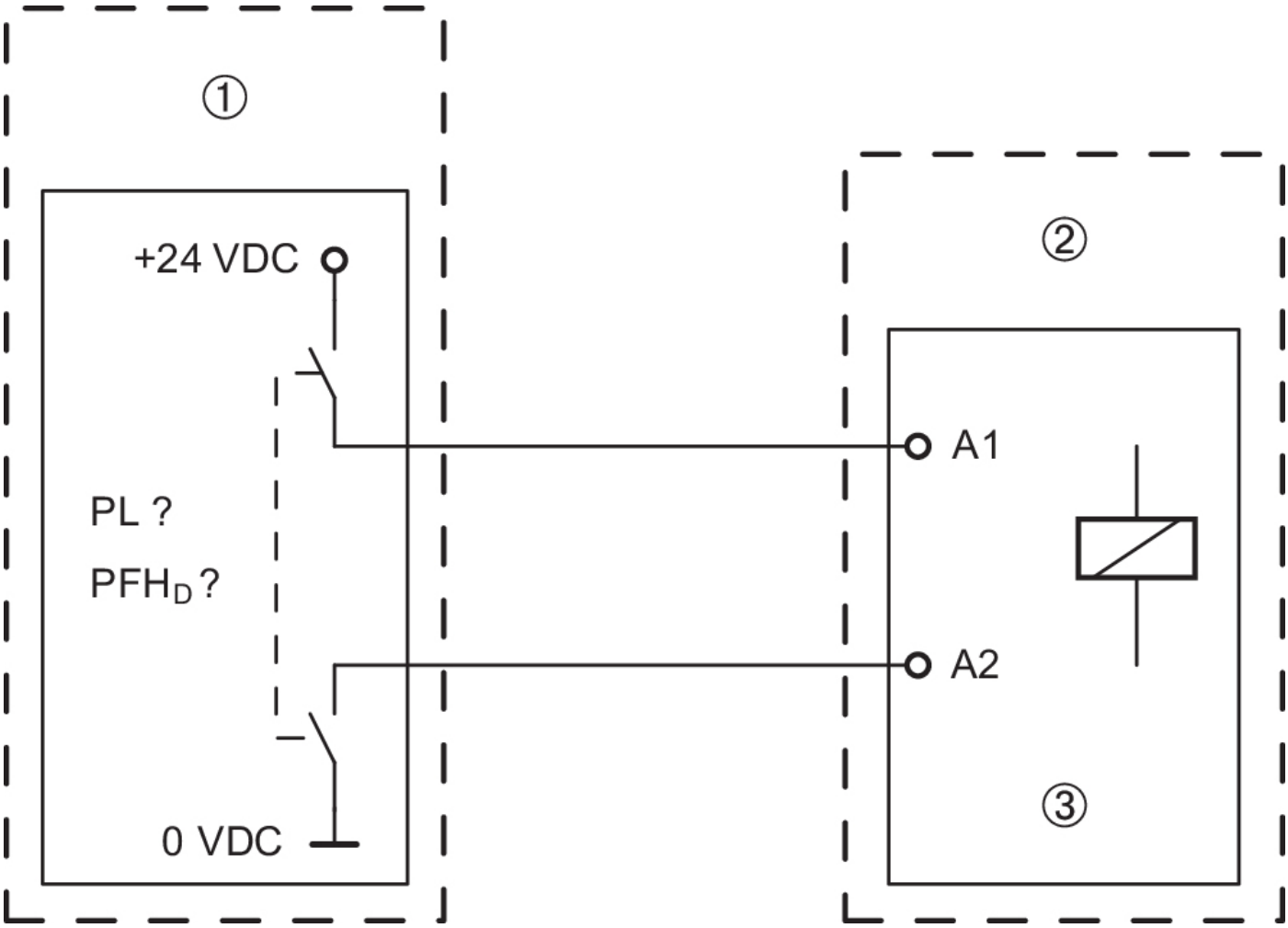

Legend	
①	Safety power shutdown
②	Solenoid interlock
③	Guard locking function

Fault exclusion with regard to wiring routing must be observed.

If for a certain application the power to unlock version of a solenoid interlock cannot be used, for this exception an interlock with power to lock can be used if additional safety measure need to be realised that have an equivalent safety level.

UL notice

Use Type 4X (Indoor Use) and 12 connector fittings. Tightening torque rating: 4.4 lb in.

3 Mounting

3.1 General mounting instructions

Please observe the remarks of the standards EN ISO 12100, EN ISO 14119 and EN ISO 14120.

Three mounting holes are provided for fixing the enclosure. The solenoid interlock is double insulated. The use of an earth wire is not authorised. The solenoid interlock must not be used as an end stop. Any mounting position. The mounting position however must be chosen so that the ingress of dirt and soiling in the used opening is avoided. Unused actuator openings must be sealed with slot sealing plugs.

The actuator must be permanently fitted to the safety guards and protected against displacement by suitable measures (tamperproof screws, gluing, drilling of the screw heads).

3.2 Dimensions

All measurements in mm.

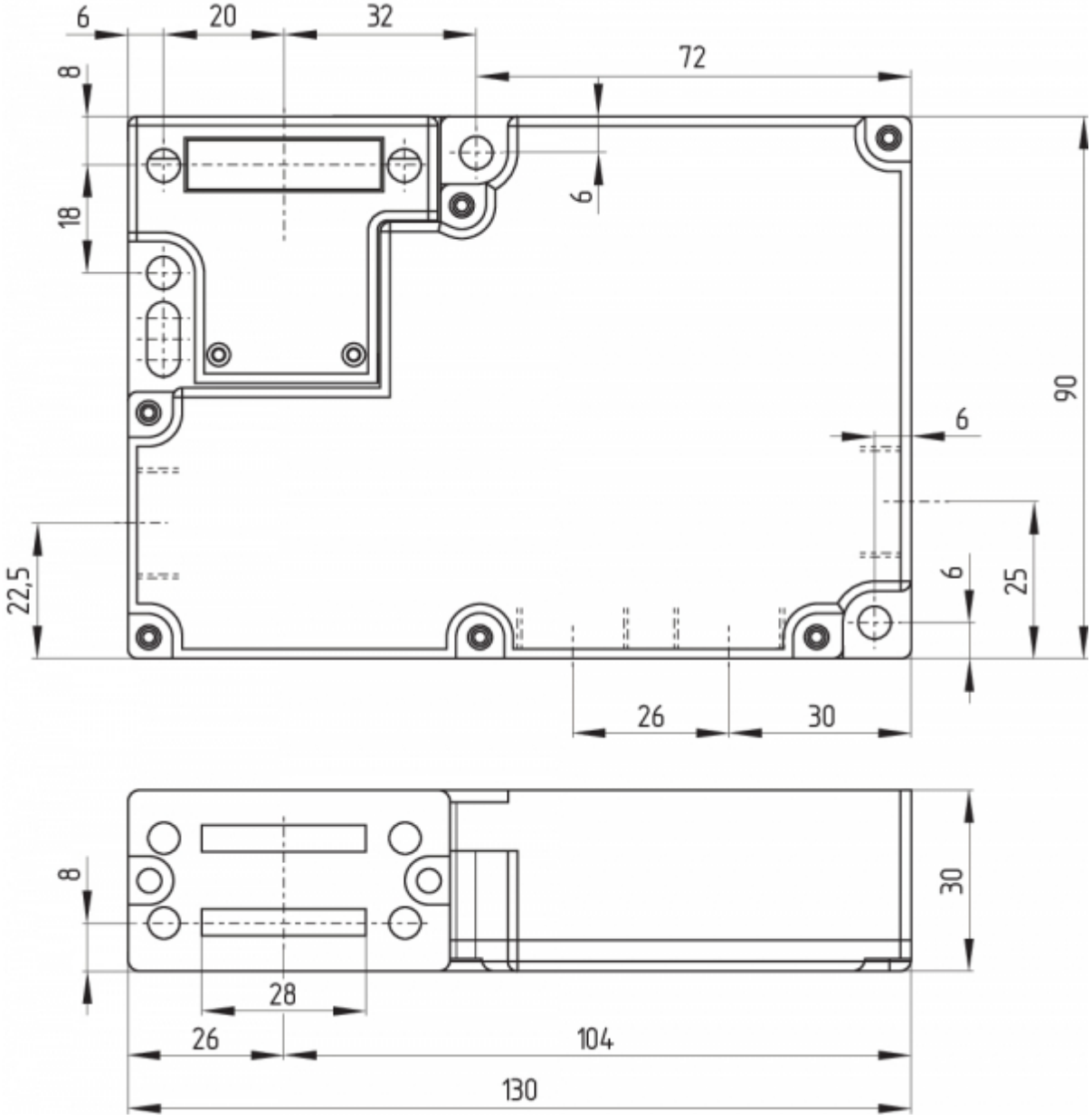

3.3 Manual release

(for set-up, maintenance, etc.)
Manual release is realised by turning the triangular key by 180° (M5 triangular key available as accessory), so that the locking bolt is pulled into the unlocking position. Please ensure that jamming by external influence on the actuator is avoided. The normal locking function is only restored after the triangular key has been returned to its original position. After being put into operation, the manual release must be secured by installing the plastic cover, which is included in delivery.

Lateral manual release	**Manual release on the cover side or on the rear side (ordering suffix -ED/-EU)**

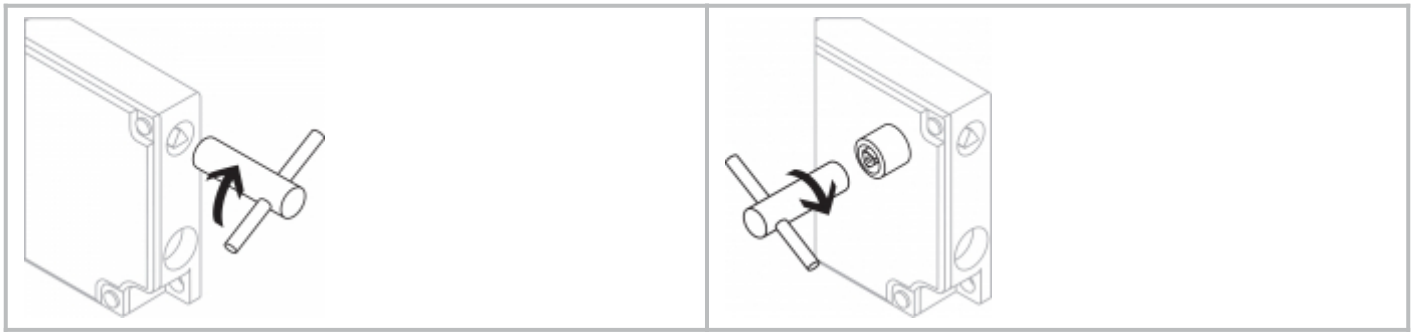

Triangular key TK-M5 (101100887) available as accessory.

3.4 Emergency release (ordering suffix -N)

(Fitting and actuation only from outside the hazardous area)

> ⚠ The emergency release should only be used in an emergency. The solenoid interlock should be installed and/or protected so that an inadvertent opening of the interlock by an emergency release can be prevented. The emergency release must be clearly labelled that it should only be used in an emergency. The label can be used that was included in the delivery.

To activate the emergency release in case of an emergency, the orange lever must be turned to the stop in the direction marked by the arrow. In this position, the safety guard can be opened. The lever is latched and cannot be returned to its original position. To cancel the blocking condition, the central mounting screw must be loosened to such extent that the lever can be turned back into its original position. The screw must then be re-tightened.

3.5 Emergency Exit

(Fitting and actuation only from within the hazardous area)

To activate the emergency exit of the T version in case of an emergency, the orange lever must be turned to the stop in direction marked by the arrow. The emergency exit function of the TD and TU versions is activated by pressing the red pushbutton. In this position, the safety guard can be opened. The blocking condition is cancelled by turning the lever in opposite direction or by pulling back the pushbutton. In unlocked position, the safety guard is protected against unintentional closing.

Lateral emergency exit (ordering suffix -T)	**Emergency exit on the cover side or on the rear side (ordering suffix -TD/-TU)**

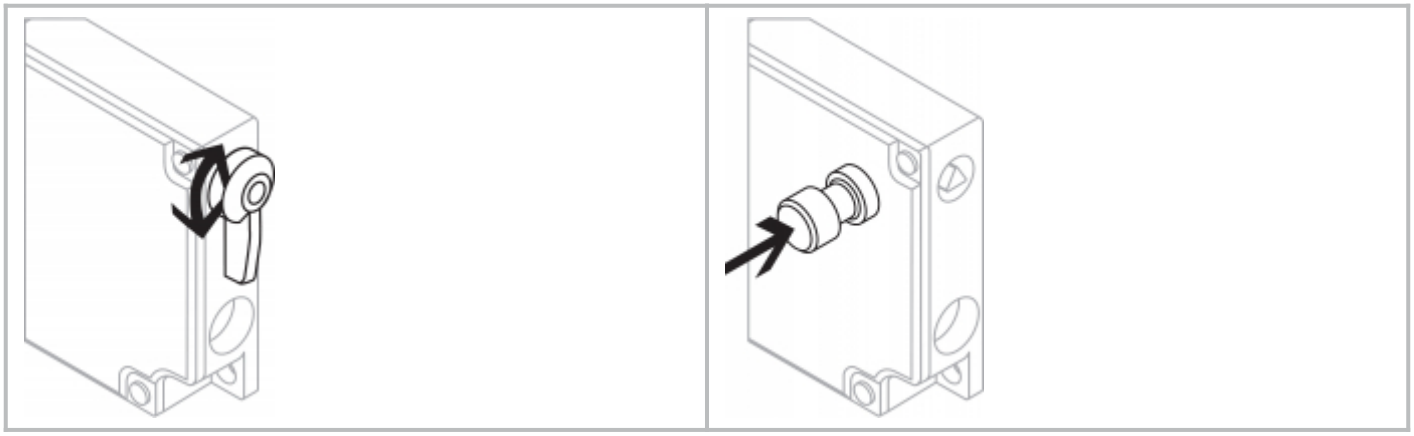

4 Electrical connection

4.1 General information for electrical connection

The electrical connection may only be carried out by authorised personnel in a de-energised condition.

If the risk analysis indicates the use of a monitored interlock they are to be connected in the safety circuit with the contacts indicated with the symbol .

Appropriate cable glands with a suitable degree of protection are to be used. Remove the walls of the mounting holes by inserting the cable entry. All plastic residues must be removed from the switch compartment.

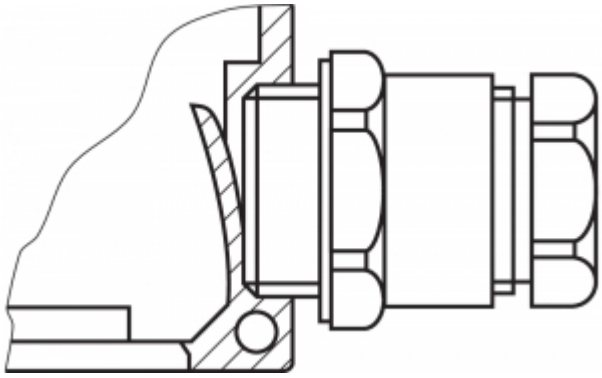

Puncturing the wall of the holes with auxiliary tools (e.g. screwdriver) can cause damage.

Settle length x of the conductor:
- on cage clamps (CC) of type s or f: 5 ... 6 mm
- on screw terminals (SK): 7 mm

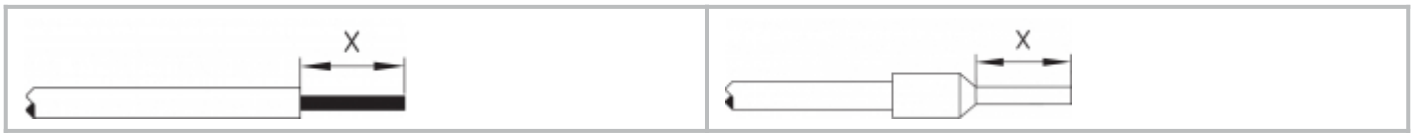

Once the connection has been made, clean any dirt from the inside of the switch and refit the housing cover. The tightening torque of the cover screws is 0.6 Nm. The tightening sequence of the screws is shown in the following illustration.

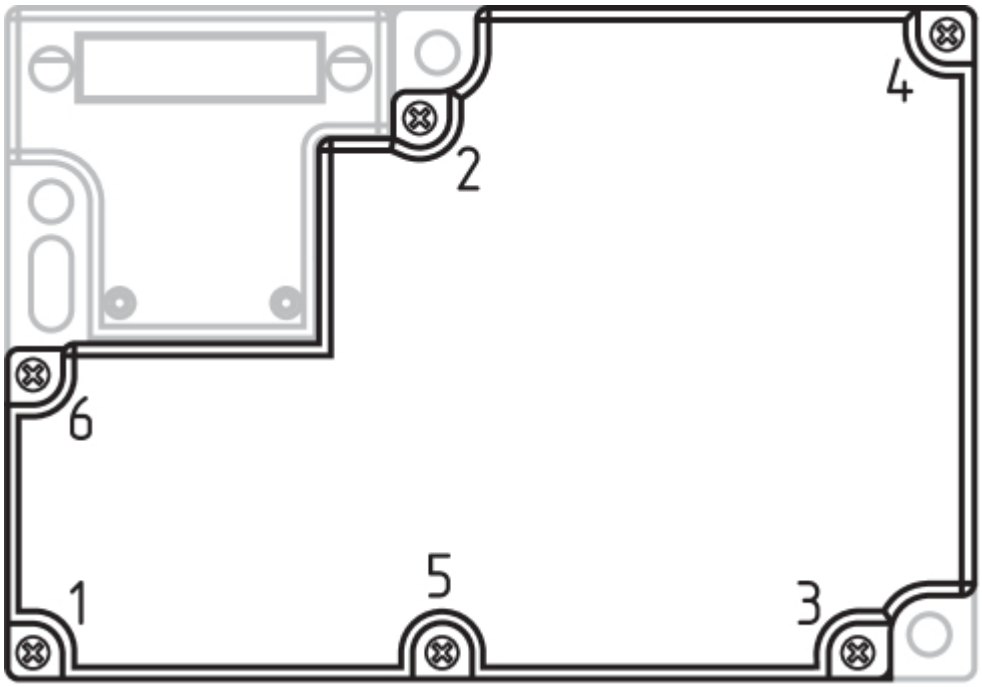

4.2 Contact Options

Contacts shown in a de-energised condition and with the actuator inserted.

Power to unlock	Power to lock
AZM 161SK-12/12... und AZM 161CC-12/12...	
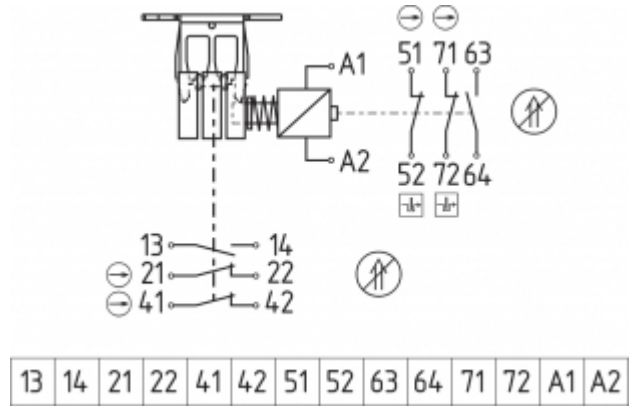 13 14 21 22 41 42 51 52 63 64 71 72 A1 A2	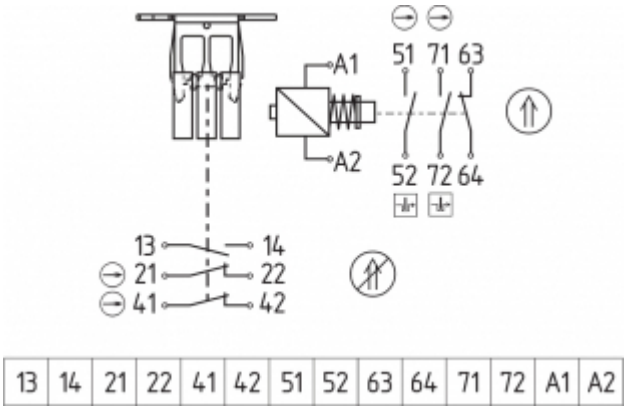 13 14 21 22 41 42 51 52 63 64 71 72 A1 A2
AZM 161SK-12/03... und AZM 161CC-12/03...	
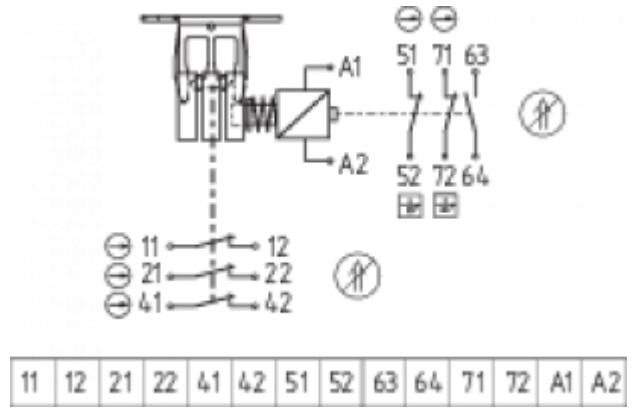 11 12 21 22 41 42 51 52 63 64 71 72 A1 A2	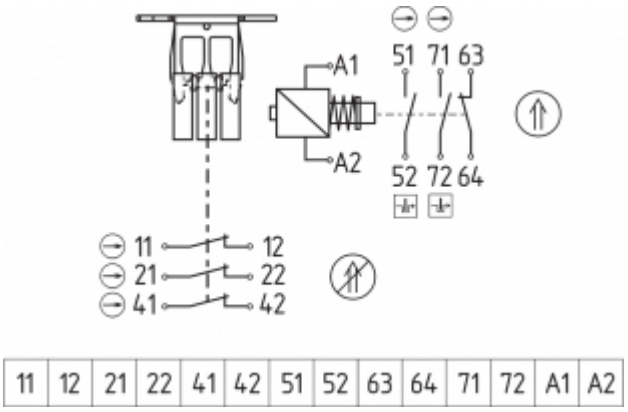 11 12 21 22 41 42 51 52 63 64 71 72 A1 A2

Key	
⊖	Positive break NC contact
⊣▷	Monitoring the interlock according to EN ISO 14119
⇑	Actuated
⇑̸	Not actuated

AZM 161ST-../.. with connector **AZM 161ST-12/11...**	**AZM 161ST-11/12...**

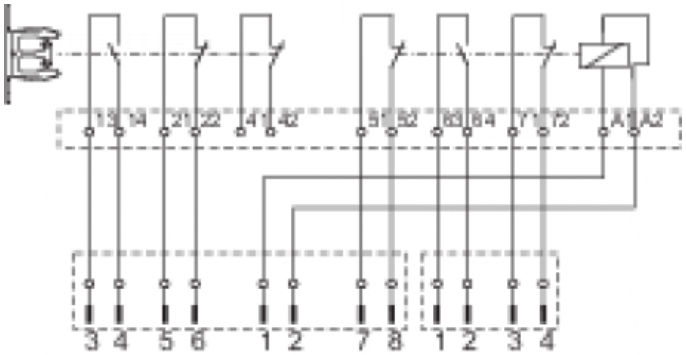

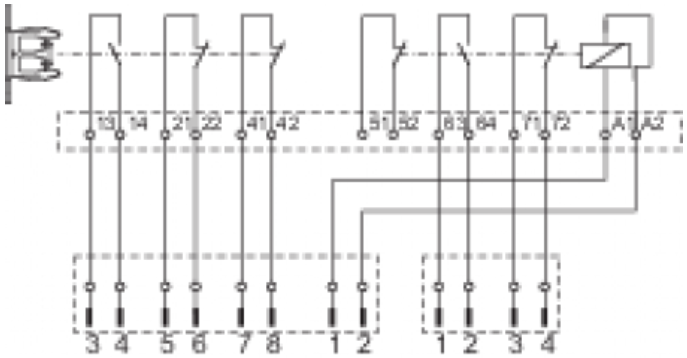

AZM 161ST-11/03...

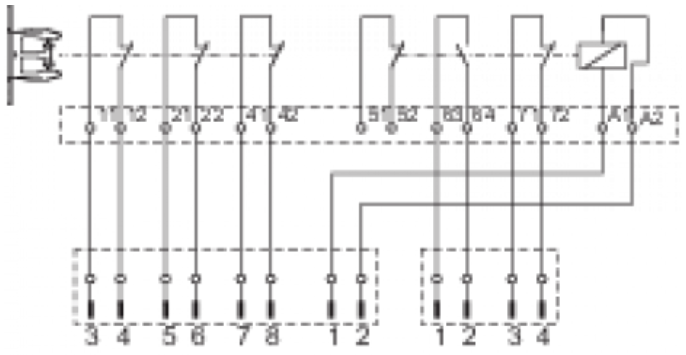

AZM 161...-G with LED

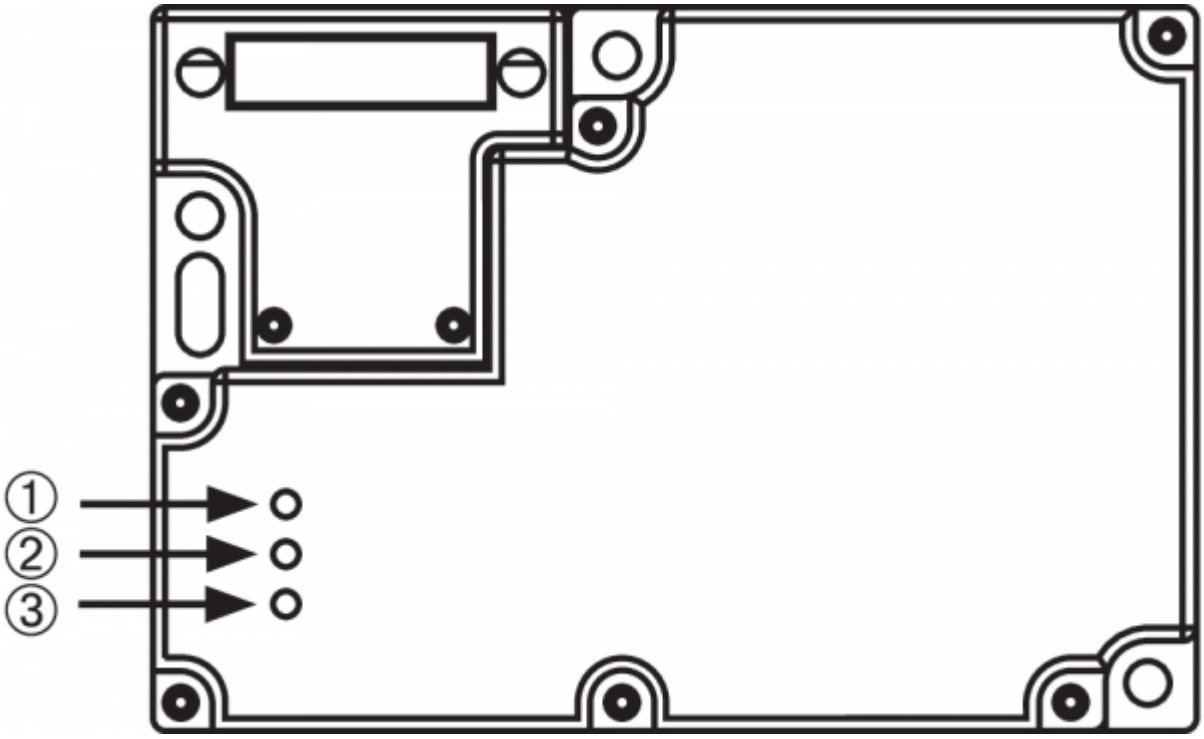

Integrated contact kit 12/12 G (with LED)

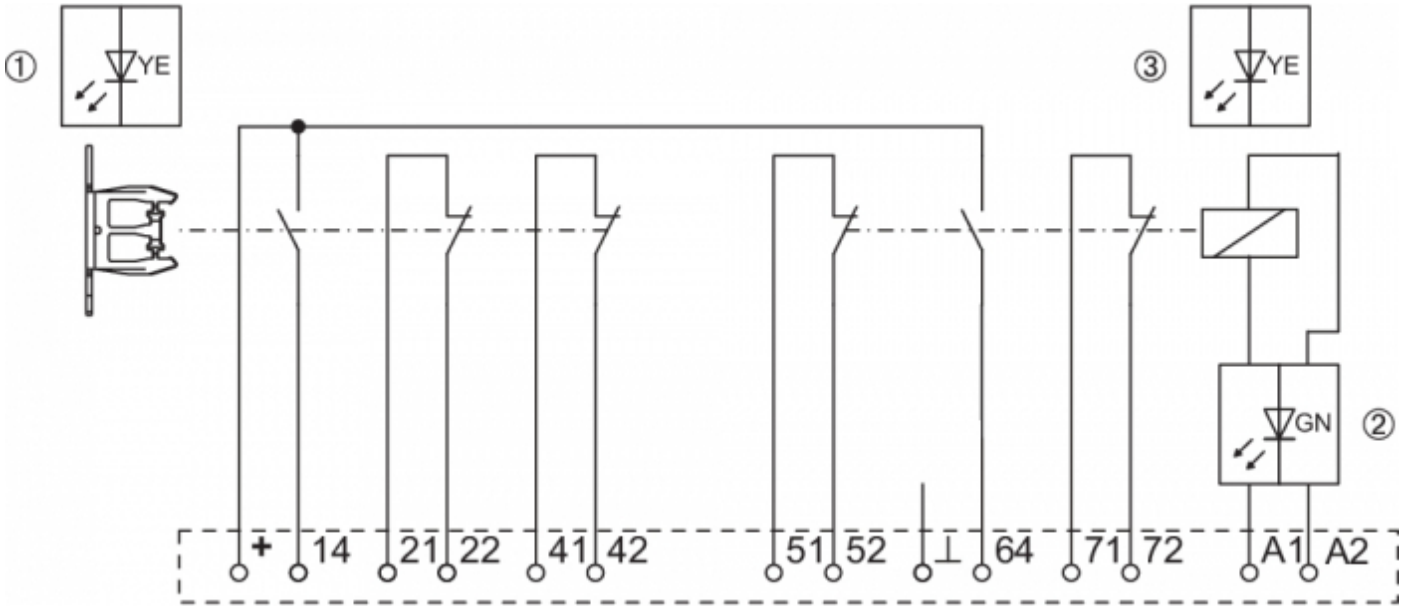

The 24 V are led internally to contacts 13 and 63. The corresponding signals of the LED display can also be tapped at terminals 14 or 64.

Integrated contact kit 12/03 G (with LED)

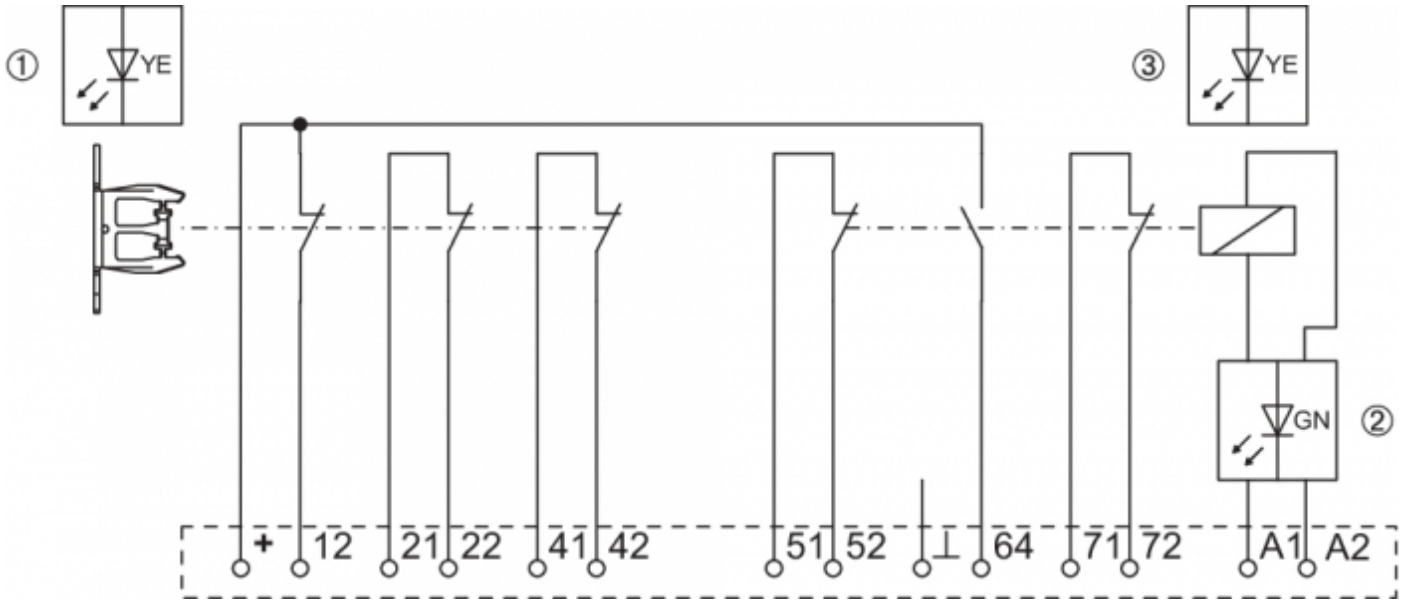

The 24 V are led internally to contacts 11 and 63. The corresponding signals of the LED display can also be tapped at terminals 12 or 64.

Legend	
1	Door closed
2	Solenoid on
3	Door locked

Power to unlock				
System condition	Magnet control	LED		
	Power to unlock	yellow ①	green ②	yellow ③
Door open	24 V (0 V)	Off	On	Off
Door closed, actuator inserted, **not locked**	24 V	On	On	Off
Door closed, actuator inserted **and locked**	0 V	On	Off	On

Power to lock				
System condition	Magnet control	LED		
	Power to lock	yellow ①	green ②	yellow ③
Door open	0 V (24 V)	Off	Off	Off
Door closed, actuator inserted, **not locked**	0 V	On	Off	Off
Door closed, actuator inserted **and locked**	24 V	On	On	On

5 Set-up and maintenance

The safety function of the safety components must be tested. In the case of correct installation and adequate use, the safety switchgear features maintenance-free functionality. A regular visual inspection and functional test, including the following steps, is recommended:

1. Check fixation of the safety switch and the actuator.
2. Fitting and integrity of the cable connections.
3. Remove particles of dust and soiling.

Adequate measures must be taken to ensure protection against tampering either to prevent tampering of the safety guard, for instance by means of replacement actuators.

Damaged or defective components must be replaced.

6 Disassembly and disposal

6.1 Disassembly

The safety switchgear must be disassembled in a de-energised condition only.

6.2 Disposal

The safety switchgear must be disposed of in an appropriate manner in accordance with the national prescriptions and legislations.

Schmersal Ibérica, S.L., Rambla P. Catalanes, Nº 12, 08800 Vilanova i la Geltrú
Los datos e información anteriores se han verificado cuidadosamente. Las imágenes pueden diferir del original. Se pueden encontrar más datos técnicos en los manuales de instrucciones. Sujeto a cambios técnicos y errores.
Generado a 21/3/2025 18:50