取扱いおよび設置説明書
電磁ロック付きインターロック AZM300Z-ST-SD2P-T

Table of Contents

1 About this document
  1.1 Function
  1.2 Target group of the operating instructions: authorised qualified personnel
  1.3 Explanation of the symbols used
  1.4 Appropriate use
  1.5 General safety instructions
2 Product description
  2.1 Ordering code
  2.2 Special versions
  2.3 Purpose
  2.4 Warning about misuse
  2.5 Exclusion of liability
  2.6 Technical Data
3 Mounting
  3.1 General mounting instructions
  3.2 Manual release
  3.3 Emergency exit -T/-T8 or emergency release -N
  3.4 Mounting with mounting plate
  3.5 Dimensions
  3.6 Actuator and accessories
4 Electrical connection
  4.1 General information for electrical connection
  4.2 Serial diagnostic -SD
  4.3 Wiring examples for series-wiring
  4.4 Wiring configuration and connector accessories
5 Actuator coding and latching force adjustment
  5.1 Actuator coding
  5.2 Latching force adjustment
6 Active principle and diagnostic functions
  6.1 Magnet control
  6.2 Mode of operation of the safety outputs
  6.3 Diagnostic-LEDs
  6.4 Solenoid interlock with conventional diagnostic output
  6.5 Solenoid interlock with serial diagnostic function SD
7 Set-up and maintenance
8 Disassembly and disposal
  8.1 Disassembly
  8.2 Disposal

1 About this document

1.1 Function

This document provides all the information you need for the mounting, set-up and commissioning to ensure the safe operation and disassembly of the switchgear. The operating instructions enclosed with the device must always be kept in a legible condition and accessible.

1.2 Target group of the operating instructions: authorised qualified personnel

All operations described in the operating instructions manual must be carried out by trained specialist personnel, authorised by the plant operator only.

Please make sure that you have read and understood these operating instructions and that you know all applicable legislations regarding occupational safety and accident prevention prior to installation and putting the component into operation.

The machine builder must carefully select the harmonised standards to be complied with as well as other technical specifications for the selection, mounting and integration of the components.

The information contained in this operating instructions manual is provided without liability and is subject to technical modifications.

1.3 Explanation of the symbols used

Information, hint, note: This symbol is used for identifying useful additional information.

Caution: Failure to comply with this warning notice could lead to failures or malfunctions.
Warning: Failure to comply with this warning notice could lead to physical injury and/or damage to the machine.

1.4 Appropriate use

The Schmersal range of products is not intended for private consumers.

The products described in these operating instructions are developed to execute safety-related functions as part of an entire plant or machine. It is the responsibility of the manufacturer of a machine or plant to ensure the correct functionality of the entire machine or plant.

The safety switchgear must be exclusively used in accordance with the versions listed below or for the applications authorised by the manufacturer. Detailed information regarding the range of applications can be found in the chapter "Product description".

1.5 General safety instructions

The user must observe the safety instructions in this operating instructions manual, the country specific installation standards as well as all prevailing safety regulations and accident prevention rules.

Further technical information can be found in the Schmersal catalogues or in the online catalogue on the Internet: products.schmersal.com.

2 Product description

2.1 Ordering code

Product type description: AZM300(1)-(2)-ST-(3)-(4)-(5)

(1)	
Z	Guard locking monitored

B	Actuator monitored

(2)	
without	Standard coding
I1	Individual coding
I2	Individual coding, multiple teaching

(3)	
1P2P	1 p-type diagnostic output and 2 p-type safety outputs
SD2P	serial diagnostic output and 2 p-type safety outputs

(4)	
without	Power to unlock
A	Power to lock

(5)	
without	Manual release
N	Emergency release
T	Emergency exit
T 8	Emergency exit, distance 8.5 mm

2.2 Special versions

For special versions, which are not listed in the ordering code, these specifications apply accordingly, provided that they correspond to the standard version.

2.3 Purpose

The non-contact, electronic safety switchgear is designed for application in safety circuits and is used for monitoring the position and locking of movable safety guards.

The safety switchgears are classified according to EN ISO 14119 as type 4 interlocking devices. Designs with individual coding are classified as highly coded.

The different variants can be used as safety switch with interlocking function either as solenoid interlock.

If the risk analysis indicates the use of a **monitored interlock** then a variant with the monitored interlock is to be used, marked with the symbol in the ordering code.
The actuator monitoring variant (B) is a safety switch with an interlock function for process protection.

The safety function consists of safely switching off the safety outputs when the safety guard is unlocked or opened and maintaining the safe switched off condition of the safety outputs for as long as the safety guard is open.

Interlocks with power to lock principle may only be used in special cases after a thorough evaluation of the accident risk, since the safety guard can be opened immediately on failure of the power supply or upon activation of the main switch.

Series-wiring
Series-wiring can be set up. In the case of a series connection, the risk time remains unchanged and the reaction time increases by the sum of the reaction time of the inputs per additional unit specified in the technical data. The quantity of devices is only limited by the cable drops and the external cable fuse protection, according to the

technical data. Up to 31 device variants with serial diagnostics can be wired in series.

The user must evaluate and design the safety chain in accordance with the relevant standards and the required safety level. If multiple safety sensors are involved in the same safety function, the PFH values of the individual components must be added.

The entire concept of the control system, in which the safety component is integrated, must be validated to the relevant standards.

2.4 Warning about misuse

In case of improper use or manipulation of the safety switchgear, personal hazards or damages to machinery or plant components cannot be excluded. There are no residual risks, provided that the safety instructions as well as the instructions regarding mounting, commissioning, operation and maintenance are observed.

2.5 Exclusion of liability

We shall accept no liability for damages and malfunctions resulting from defective mounting or failure to comply with the operating instructions manual. The manufacturer shall accept no liability for damages resulting from the use of unauthorised spare parts or accessories.

For safety reasons, invasive work on the device as well as arbitrary repairs, conversions and modifications to the device are strictly forbidden, the manufacturer shall accept no liability for damages resulting from such invasive work, arbitrary repairs, conversions and/or modifications to the device.

2.6 Technical Data

認証

証明書	TÜV cULus ECOLAB FCC IC UKCA ANATEL

一般データ

規格	EN ISO 13849-1 EN ISO 14119 EN IEC 60947-5-3 EN IEC 61508
一般情報	ユニバーサルコード化
Coding level according to EN ISO 14119	Low
アクティブ原理	RFID
周波数帯、RFID	125 kHz
送信機出力 RFID、最大	-6 dB/m
ハウジング 材質	グラスファイバー強化熱可塑性樹脂
リスク持続時間、最大	200 ms
アクチュエーターの応答時間、最大	100 ms
入力の応答時間、最大	1.5 ms
総重量	650 g

一般データ - 仕様

スプリングロック	Yes
ガードロック監視	Yes
シリアル診断	Yes
ラッチング	Yes
緊急脱出	Yes
短絡検出	Yes
短絡監視	Yes
直列接続	Yes
安全機能	Yes
一体型システム診断、状態	Yes
動作方向の数	3
フェイルセーフデジタル出力の数	2

安全性評価

規格	EN ISO 13849-1 EN IEC 61508

安全性評価 - インターロック

Performance Level, up to	e
カテゴリー	4
PFH値	5.20 x 10^{-10} /h
PFD値	4.50 x 10^{-5}
安全インテグリティレベル (SIL), 安全度水準に適合	3
Mission time	20 年

機械的データ

機械的寿命、最小	1,000,000 操作
Note (Mechanical life)	When using as door stop: ≥ 50.000 operations (door mass ≤ 5 kg and actuating speed ≤ 0.5 m/s)
スイッチ本体とアクチュエータ間の角度の公差、最大	2 °
EN ISO 14119 に準拠したクロック時引抜強度	1,150 N
ロック時引抜強度, 最大	1,500 N
力、ラッチ力、調整可能、位置 1	25 N
力、ラッチ力、調整可能、位置 2	50 N
Type of the fixing screws	2x M6
取り付けネジの締め付けトルク、最小	6 Nm
Tightening torque of the fixing screws, maximum	7 Nm

Mechanical data - Switching distances according EN IEC 60947-5-3

切替距離、 典型的な	2 mm
確実な切替距離「ON」	1 mm

確実な切替距離「OFF」	20 mm

機械的データ - 電気機械式

センサーチェーンの長さ、最大	200 m
注意(センサーチェーンの長)	ケーブル長とケーブル径により、出力電流による電圧降下が変化します。
注意 (直列接続)	無制限のデバイス数,外部ラインヒューズオーバーサーブ、シリアル診断SDの場合、最大
端子 コネクター	M12コネクター, 8芯, Aコード化

機械的データ - 寸法

センサー長	146 mm
センサーの幅	87.5 mm
センサーの高さ	55 mm

環境条件

保護等級	IP66 IP67 IP69
使用周囲温度	+0 ... +60 ° C
保管および輸送温度	-10 ... +90 ° C
相対湿度, 最大	93 %
Note (Relative humidity)	non-condensing non-icing
耐振動	10 ~ 150 Hz、振幅 0.35 mm
耐衝撃	30 g / 11 ms
Protection class	III
Permissible installation altitude above sea level, maximum	2,000 m

環境条件 - 絶縁値

定格絶縁電圧	32 VDC
定格インパルス耐電圧	0.8 kV
Overvoltage category	III
汚染度	3

電気的データ

動作電圧	24 VDC -15 % / +10 %
無負荷供給電流 I_0, 典型的	100 mA
マグネットON時の消費電流 (平均	200 mA
マグネットON時の消費電流、ピーク	350 mA / 200 ms
定格動作電圧	24 VDC
動作電流	800 mA
要求定格短絡電流	100 A
外部ワイヤとデバイスのヒューズ定格	2 A gG
準備時間、最大	5,000 ms

開閉頻度、最大	0.5 Hz
電気的ヒューズ定格、最大	2 A

電気的データ - ソレノイド制御

Designation, Magnet control	IN
マグネット入力のスイッチングの閾値	-3 V … 5 V (Low) 15 V … 30 V (High)
マグネット起動時間	100 %
テストパルス幅、最大	5 ms
テストパルス間隔、最小	40 ms
Classification ZVEI CB24I, Sink	C0
Classification ZVEI CB24I, Source	C1 C2 C3

Electrical data - Safety digital inputs

Designation, Safety inputs	X1 and X2
フェイルセーフ入力のスイッチングの閾値	-3 V … 5 V (Low) 15 V … 30 V (High)
24Vの時の安全入力の消費電流	5 mA
テストパルス幅、最大	1 ms
テストパルス間隔、最小	100 ms
Classification ZVEI CB24I, Sink	C1
Classification ZVEI CB24I, Source	C1 C2 C3

Electrical data - Safety digital outputs

Designation, Safety outputs	Y1 and Y2
安全出力	short-circuit proof, p-type
Voltage drop U_d, maximum	2 V
Leakage current I_r, maximum	0.5 mA
Voltage, Utilisation category DC-12	24 VDC
Current, Utilisation category DC-12	0.25 A
Voltage, Utilisation category DC-13	24 VDC
Current, Utilisation category DC-13	0.25 A
テストパルス間隔、標準	1000 ms
テストパルス幅、最大	0.5 ms
Classification ZVEI CB24I, Source	C2
Classification ZVEI CB24I, Sink	C1 C2

Electrical data - Serial diagnostic SD

指定、シリアル診断SD	OUT
定格使用電流	150 mA

コントロールエレメントのデザイン	短絡保護あり，PNP型
配線キャパシタンス	50 nF

状態表示

Note (LED switching conditions display)	Operating condition: LED green Error / functional defect: LED red Supply voltage UB: LED green

ピン配列

PIN 1	A1 Supply voltage UB
PIN 2	X1 Safety input 1
PIN 3	A2 GND
PIN 4	Y1 Safety output 1
PIN 5	OUT serial diagnostic output
PIN 6	X2 Safety input 2
PIN 7	Y2 Safety output 2
PIN 8	IN serial diagnostic input

Note about the safety classification

The safety consideration of the guard locking function only applies for standard devices with monitored solenoid interlock AZM300Z-····-1P2P-··· (see Ordering code). A safety assessment of the guard locking function for devices with serial diagnostics "SD2P" is not allowed due to the non-safe locking/unlocking signal from the SD Gateway.

If for a certain application the power to unlock version of a solenoid interlock cannot be used, for this exception an interlock with power to lock can be used if additional safety measure need to be realised that have an equivalent safety level.

The safety analysis of the guard locking function refers to the component solenoid interlock AZM as part of the complete system.
On the customer side further measures such as safe actuation and safe cable installation to prevent faults are to be implemented.
In the event of a fault resulting in the unlocking of the guard locking, this is detected by the solenoid interlock and the safety gates Y1/Y2 switch off. When such a fault occurs the protection equipment may open immediately, just once, before the safe condition of the machine is reached. The system reaction of category 2 allows that a fault can occur between tests causing the loss of the safety function which is detected by the test.

The actuation of the interlock must be compared externally with the OSSD release. If a shut-down now occurs due to an unintentional unlocking this is detected by an external diagnostic.

UL notice

This appliance is intended to be powered by a listed source of limited voltage, limited current or Class 2. This unit must be supplied with at least 24 V DC and 0.8 A via a listed (CYJV) cable/connector assembly.

FCC/IC - Note

This device complies with Part 15 of the FCC Rules and contains licence-exempt transmitter/receivers that are compliant with ISED (Innovation, Science and Economic Development) Canada licence-exempt RSS standard(s).
Operation is subject to the following two conditions:
(1) This device may not cause harmful interference signals, and
(2) This device must be able to tolerate interference signals. These also include interference signals that could cause the device to function improperly.
This device complies with the nerve stimulation limits (ISED SPR-002) when operated at a minimum distance of 100 mm.
Changes or modifications not expressly approved by K.A. Schmersal GmbH & Co. KG could void the user's authority to

operate the equipment.

The licence-free transmitter/receiver contained in this device satisfies the requirements of the "Radio Standards Specification" of the Innovation, Science and Economic Development Canada (ISED) authority that apply to licence-free radio equipment. Operation is permissible under the following two conditions:
(1) The device must not create disturbances.
(2) The device must tolerate received radio frequency interference, even if this could impair its functionality.
This device complies with the nerve stimulation limits (ISED CNR-102) when operated at a minimum distance of 100 mm.
In the event of changes or modifications that have not been expressly approved by K.A. Schmersal GmbH & Co. KG, the user's authorisation to use the device may become ineffective.

ANATEL 20941-22-14519	Este equipamento nao tem direito àprotecao contra interferência prejudicial e nao pode causar interferencia em sistemas devidamente autorizados. Para maiores informacores consultar: **www.gov.br/anatel**

3 Mounting

3.1 General mounting instructions

Please observe the remarks of the standards EN ISO 12100, EN ISO 14119 and EN ISO 14120.

For the correct fixing of the solenoid interlock and the actuator, two mounting holes for M6 screws are provided (tightening torque: 6 ··· 7 Nm).

Any mounting position. The system must only be operated with an angle of ≤ 2° between the solenoid interlock and the actuator.

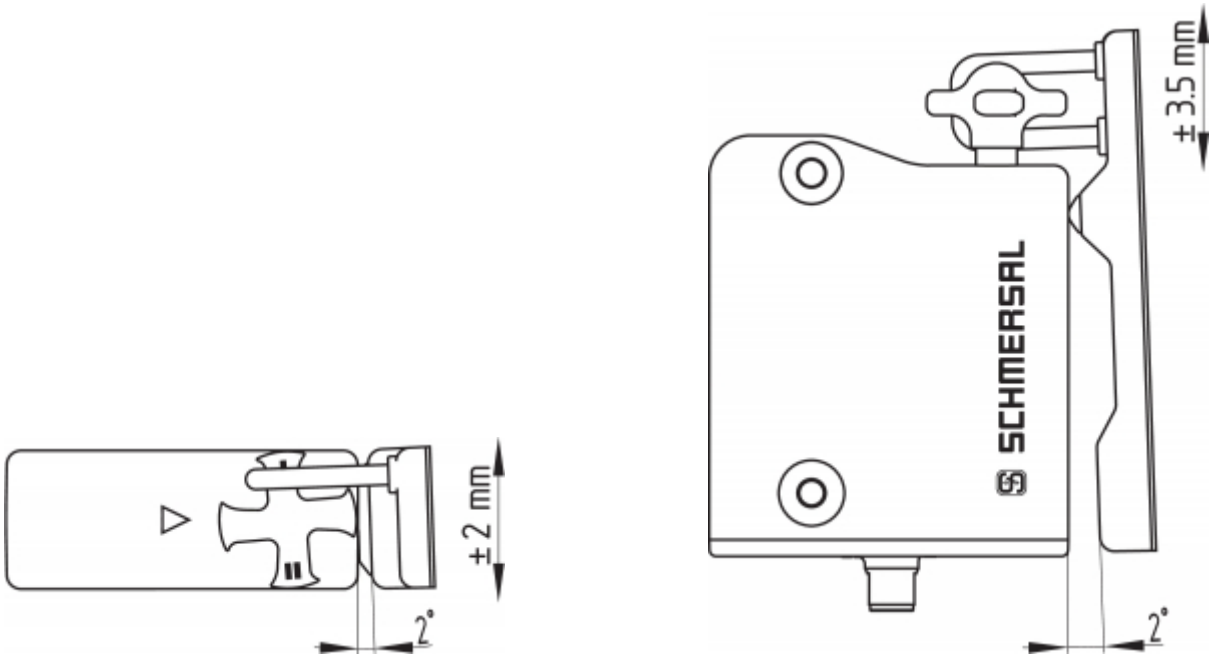

The solenoid interlock can be used as an end stop. Dependant upon the door weight and the actuating speed, the mechanical life could be reduced.

Mounting of the actuators
Refer to the mounting instructions manual for the corresponding actuator.

The actuator must be permanently fitted to the safety guards and protected against displacement by suitable measures (tamperproof screws, gluing, drilling of the screw heads).

Actuating directions

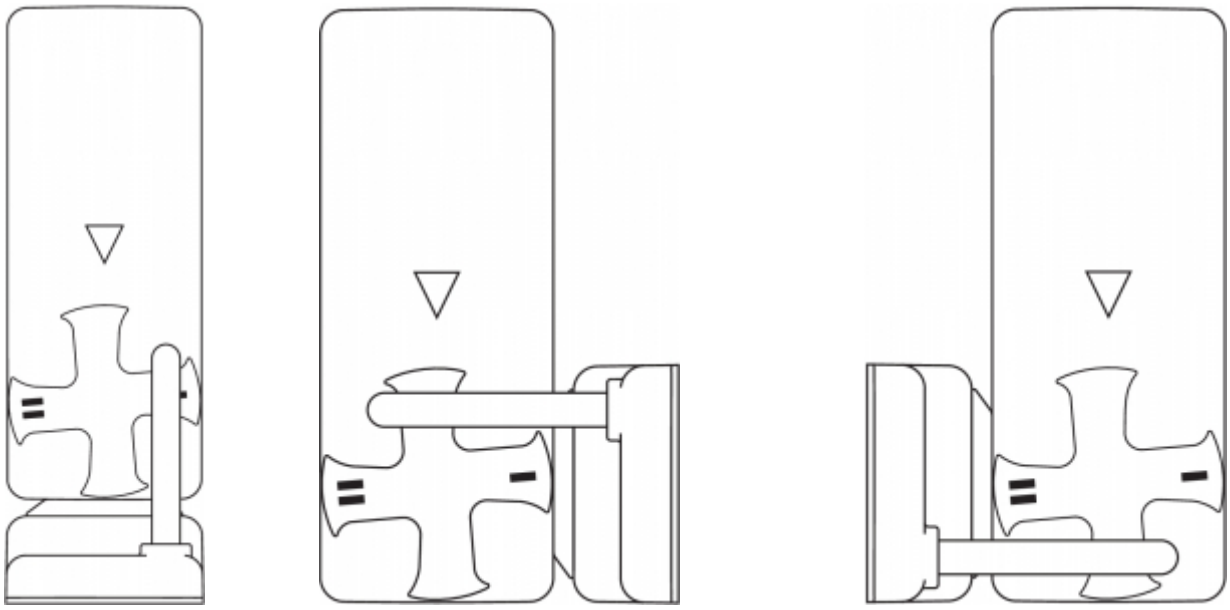

The diagrams show a closed guard system with a set latching force of 50 N (see also chapter "adjustment of latching force").

Provide for a sufficient insertion of the actuator into the rotary handle.

Correct

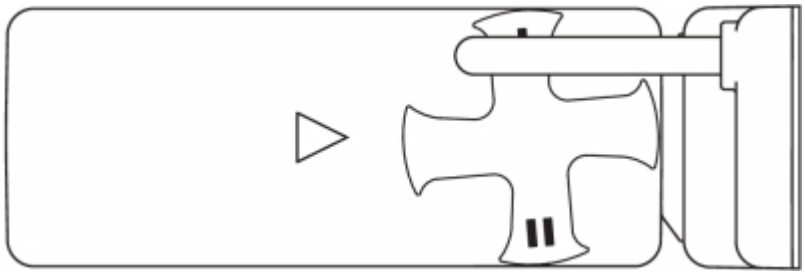

False

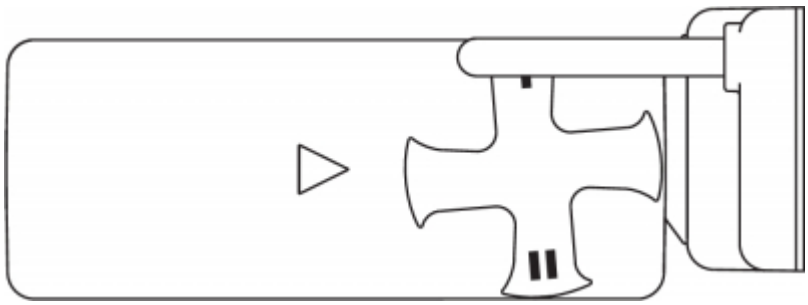

To avoid any interference inherent to this kind of system and any reduction of the switching distances, please observe the following guidelines:

- The presence of metal chips in the vicinity of the solenoid interlock is liable to modify the switching distance
- Keep away from metal chips

Minimum distance between two solenoid interlocks
as well as other systems with same frequency (125 kHz)

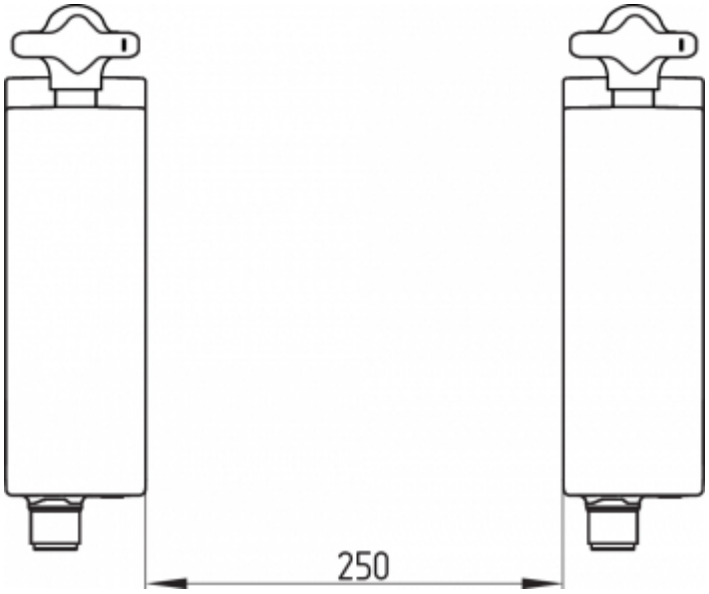

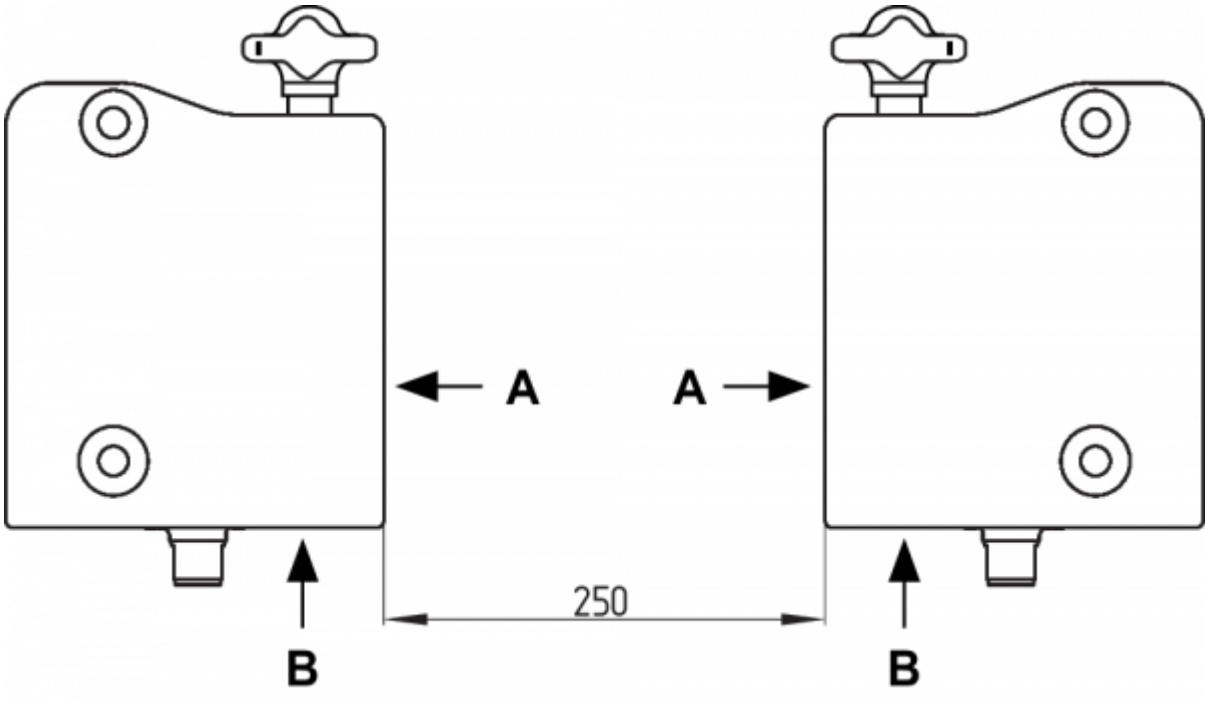

The minimum distance from metallic securing surfaces to the face side "A" and underside "B" of the device is 5 mm.

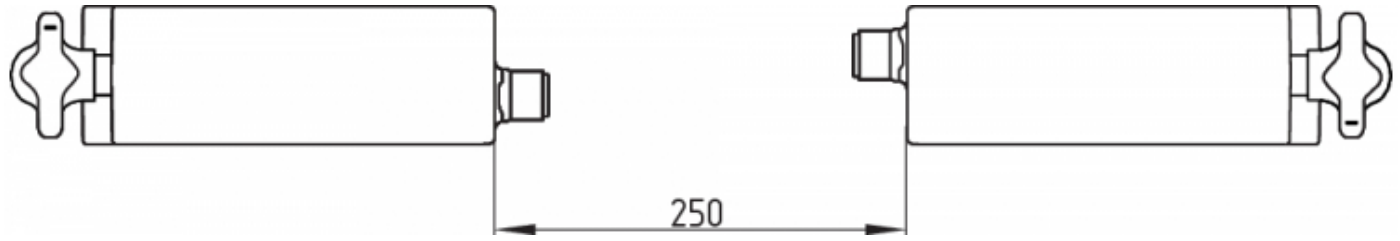

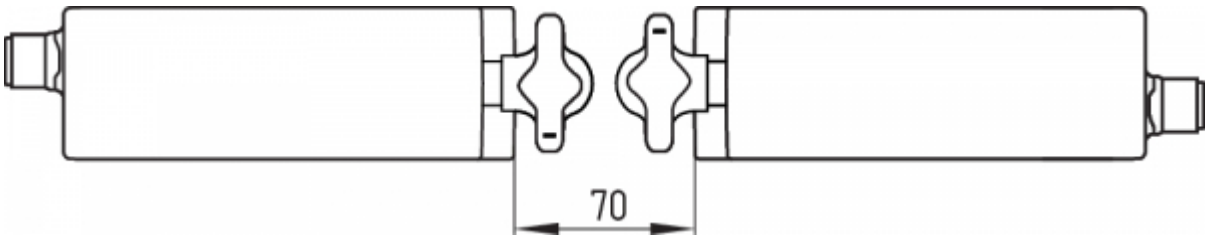

3.2 Manual release

For the machine set-up, the solenoid interlock can be unlocked in a de-energised condition. The solenoid interlock is unlocked by turning the manual release in the position The normal locking function is only restored after the manual release has been returned to its original position .

Caution: do not turn beyond the end stop!

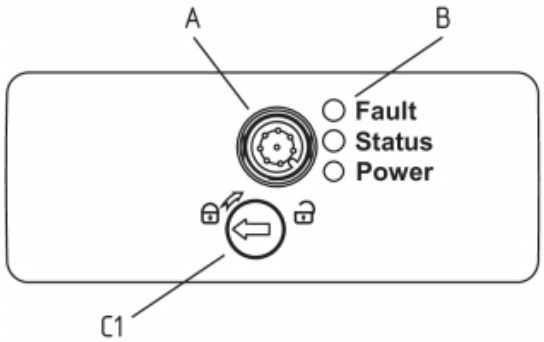

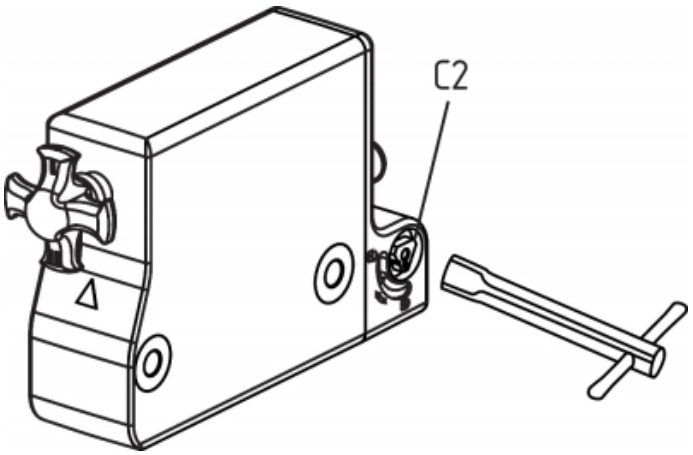

Key
A: connector plug M12, 8-pole
B: LED display
C1: Manual release by means of slotted screwdriver
C2: Manual release by means of triangular key TK-M5

The manual release must be protected against accidental actuation, e.g. by using the enclosed seal after completing commissioning.

3.3 Emergency exit -T/-T8 or emergency release -N

With variants that have both emergency exit and emergency release, the red lever is loosely supplied. Before first use, mount the lever on the triangular part of the release using the screw supplied so that the arrow in the triangle and pin on the red lever are congruent.

The installation of the lever is possible on both sides. The opposite side can be used as a manual release by means of a triangular key TK-M5.

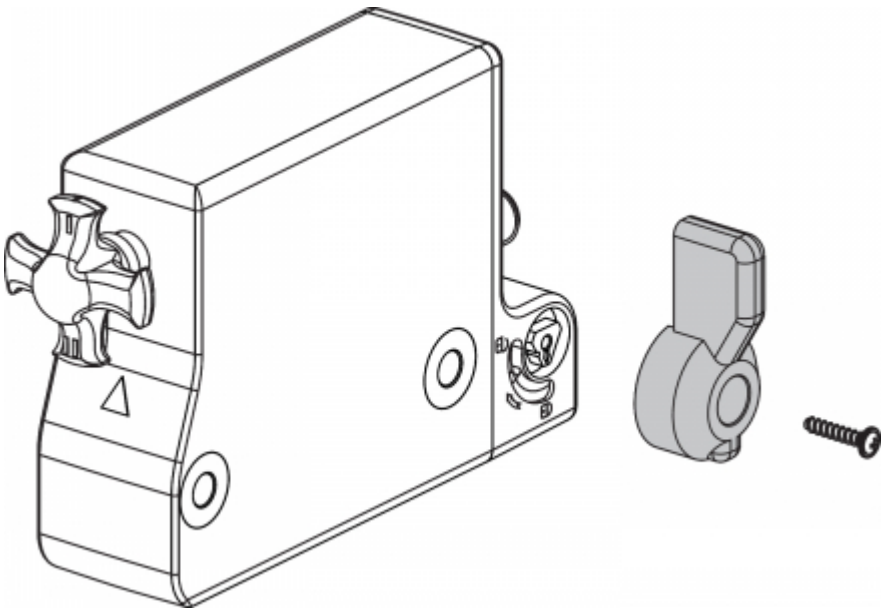

Reset of the manual release by actuating the red emergency exit lever must be prevented by the user.

Emergency exit (-T/-T8)
fitting and actuation only from within the hazardous area

To activate the emergency exit, turn the red lever in the direction of the arrow to the end stop. The safety outputs switch off and the guard system can be opened. The blocked position is cancelled by turning the lever in the opposite direction. In the unlocked position, the guard system is secured against unintentional locking.

Emergency release (-N)
Fitting and actuation only from outside the hazardous area. The emergency release should only be used in an emergency. The solenoid interlock should be installed and/or protected so that an inadvertent opening of the interlock by an emergency release can be prevented. The emergency release must be clearly labelled that it should only be used in an emergency. The label can be used that was included in the delivery.

To activate the emergency release turn the red lever in the direction of the arrow to the end stop. The safety outputs switch off and the guard system can be opened. The lever is latched and cannot be returned to its original position. To cancel the blocking condition, the central mounting screw must be loosened to such extent that the lever can be turned back into its original position. The screw must then be re-tightened.

To ensure correct operation of emergency exit -T/-T8 and emergency release -N, the safety door/guard must not be in a mechanically tensioned state.

It is possible to combine an emergency exit with an emergency release. Please note that when the red lever is actuated, the opposite lever also rotates. As such, the procedure outlined above must be followed to release the emergency release lever.

3.4 Mounting with mounting plate

For doors, which close flush with the door frame, the optional mounting late MP-AZ/AZM300-1 can be used.

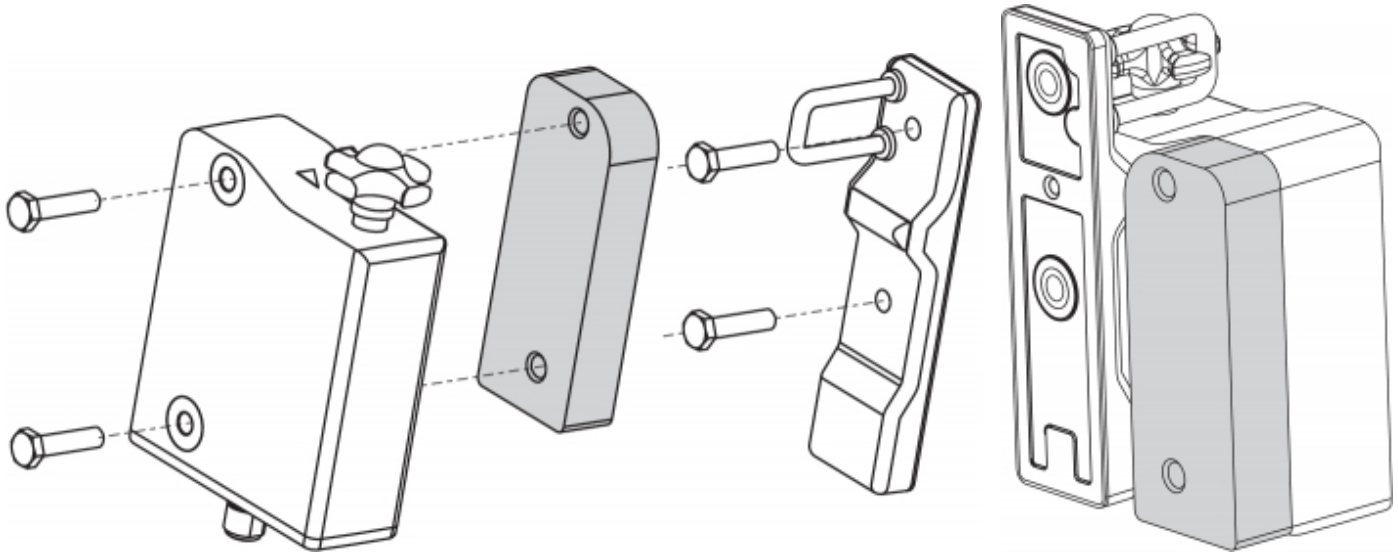

3.5 Dimensions

All measurements in mm.

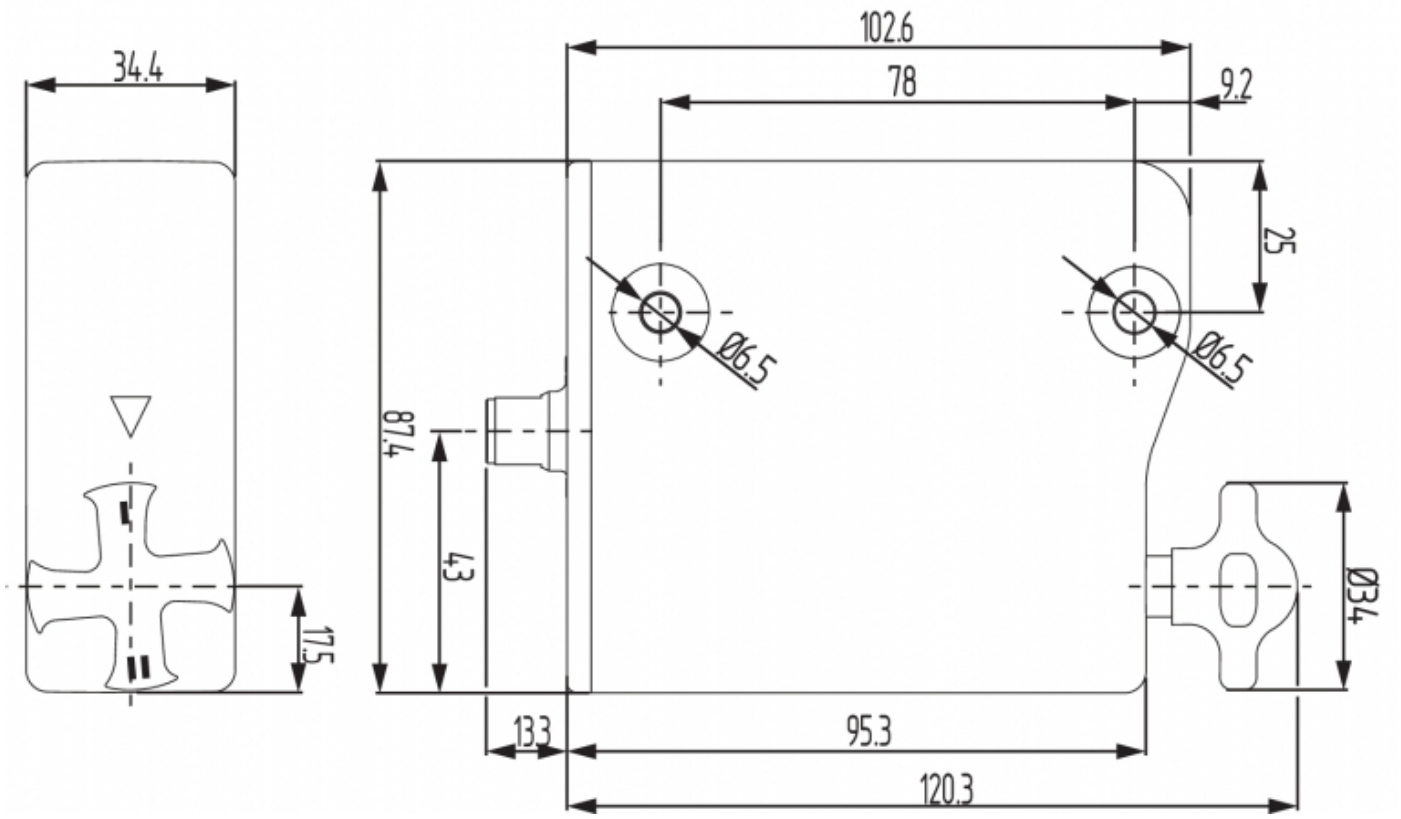

AZM300...-T/-T8 and -N
Device with emergency exit or emergency release

Emergency exit -T / Emergency release -N

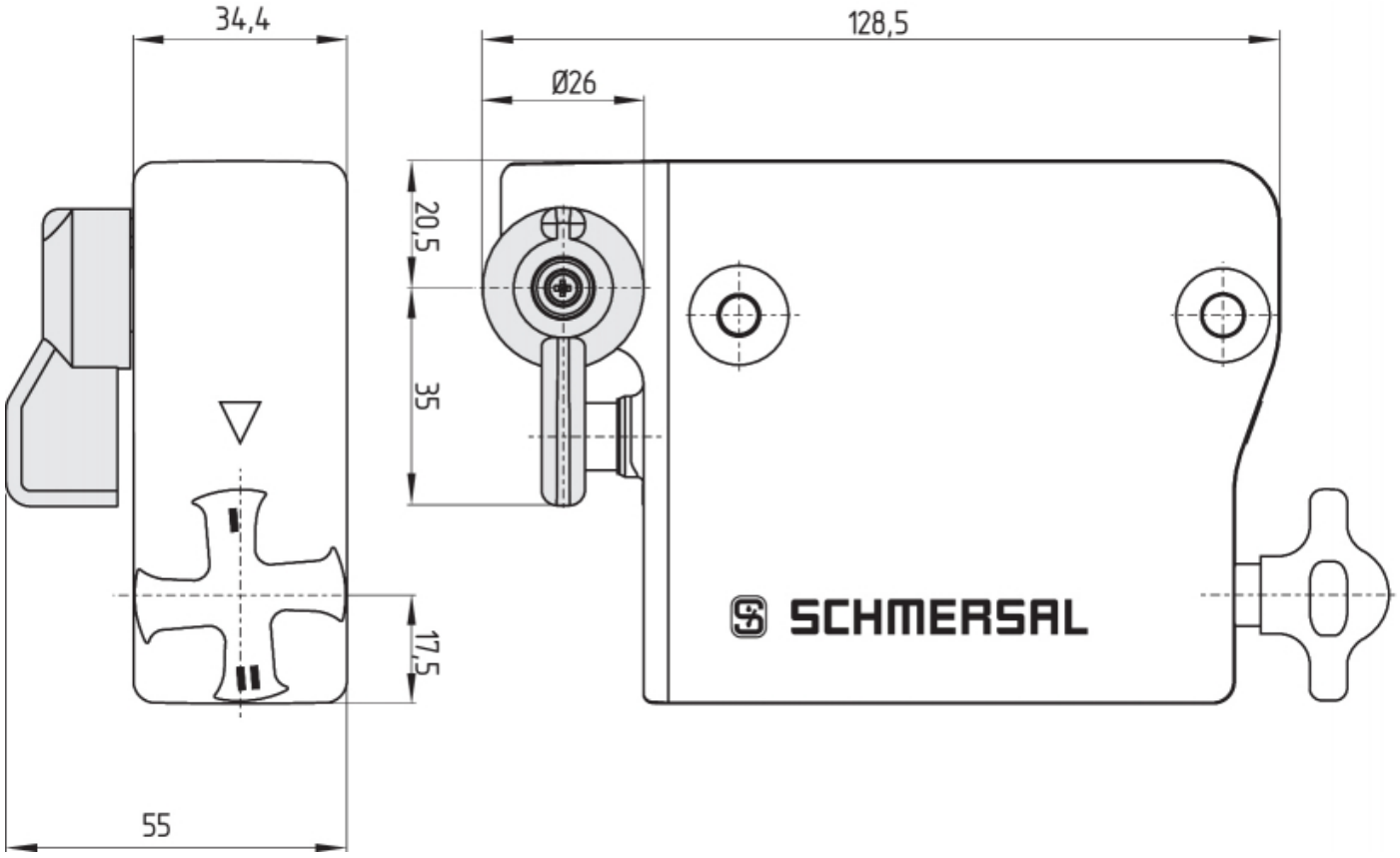

Emergency exit -T8

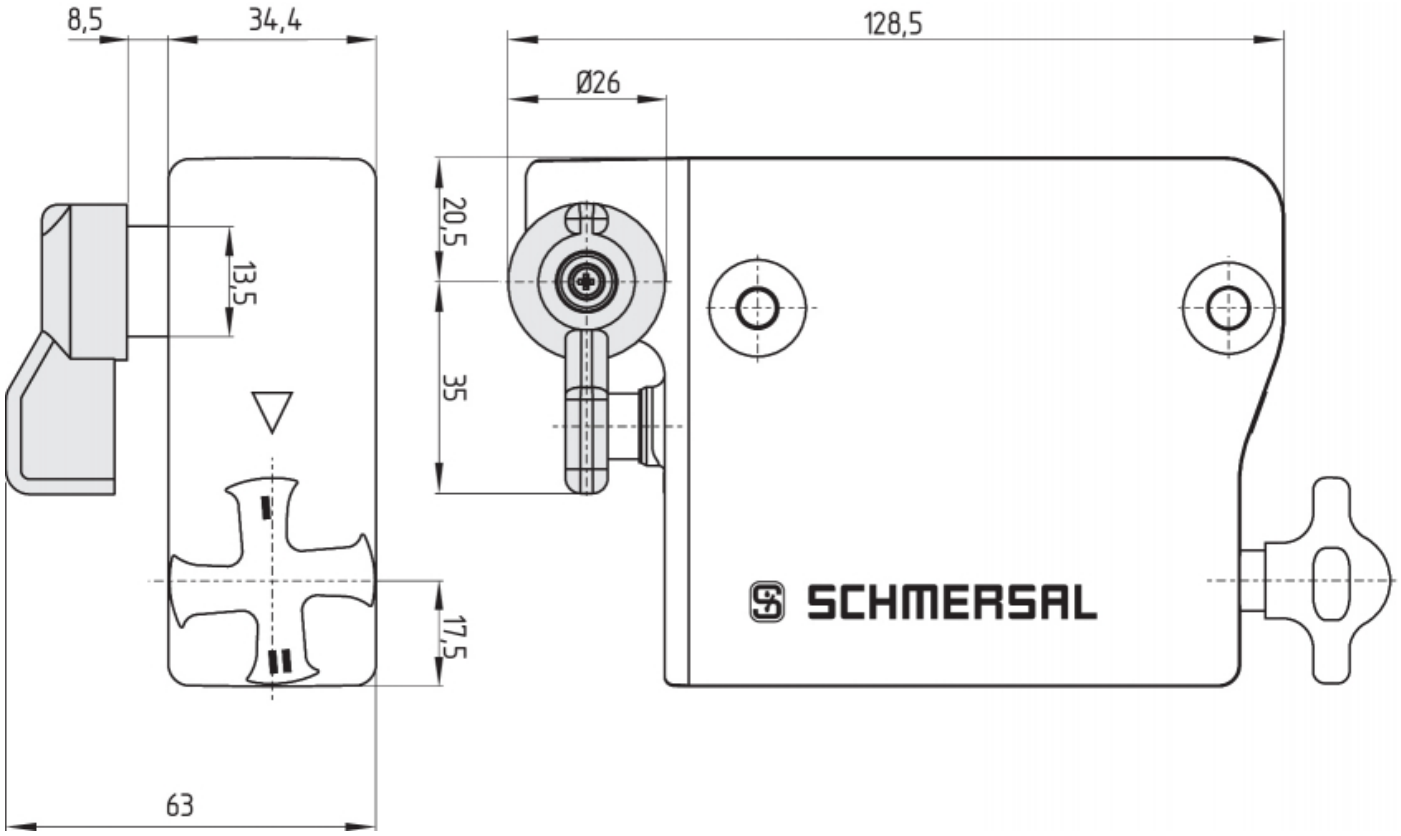

3.6 Actuator and accessories

Actuator AZ/AZM300-B1 (not included in delivery)

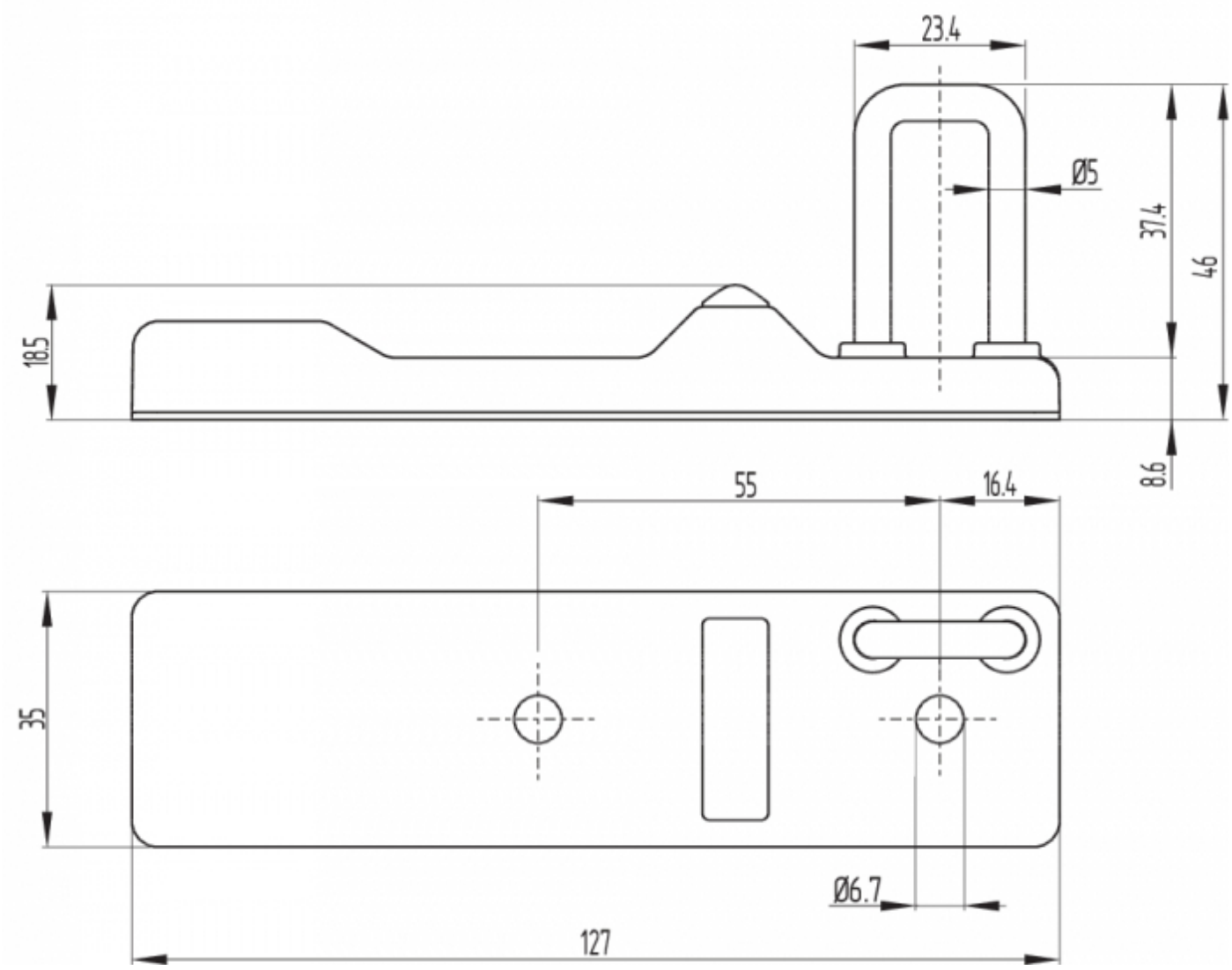

Mounting plate MP-AZ/AZM300-1 (available as accessory)

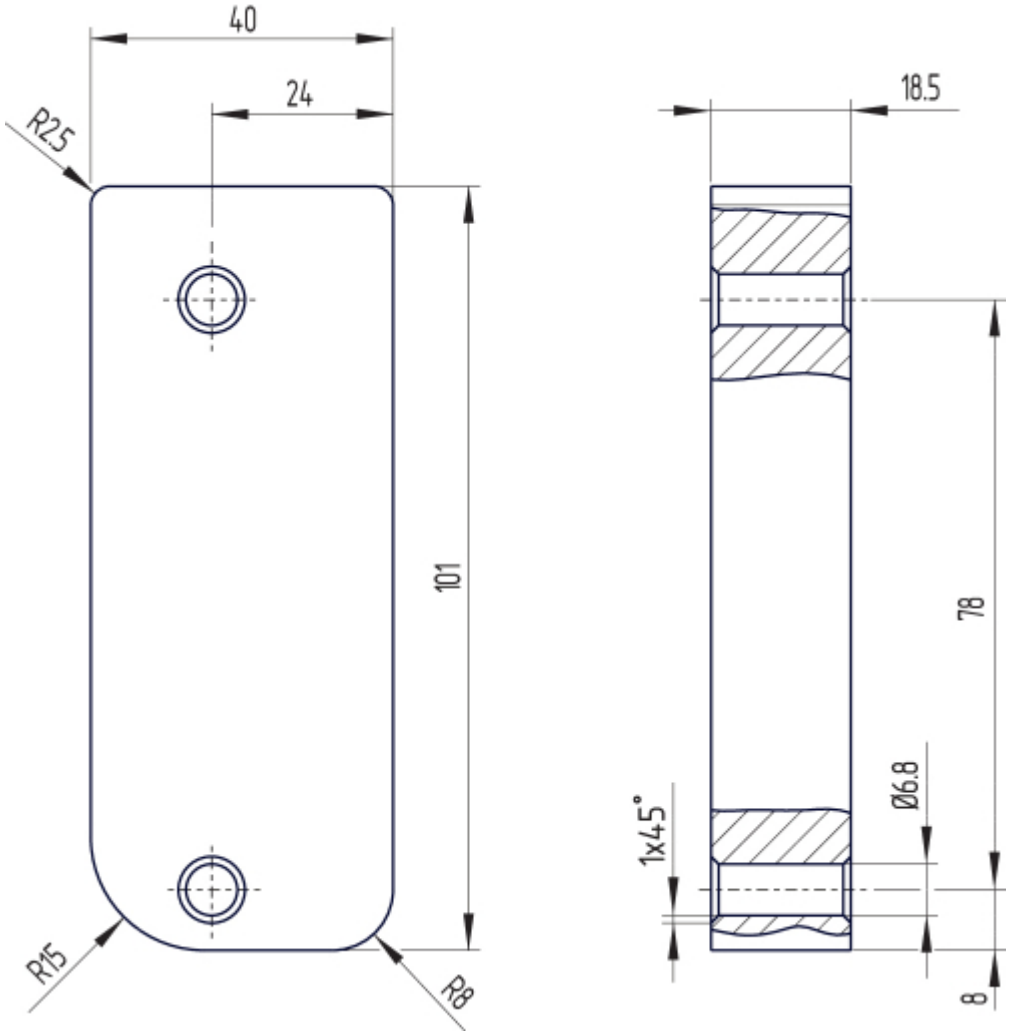

MS-AZ/AZM300-B1-1 (available as accessory)
Aluminium protective plate as a cover for use on glass and plastic doors on machines with high design requirements

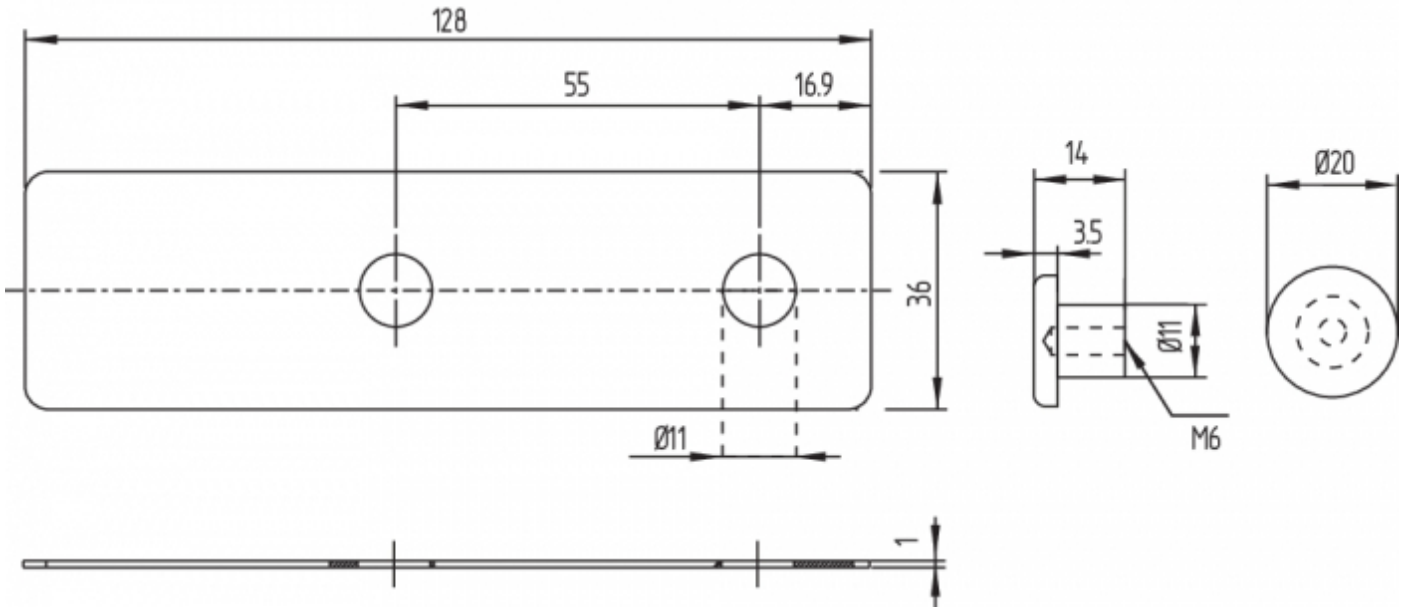

Lockout tag SZ 200-1 (available as accessory)

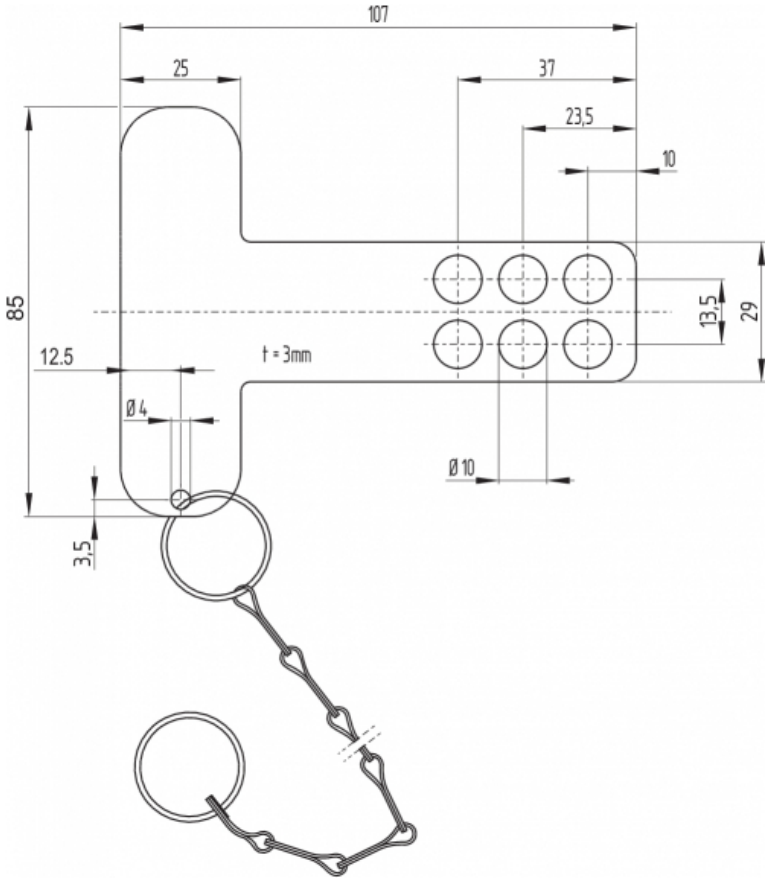

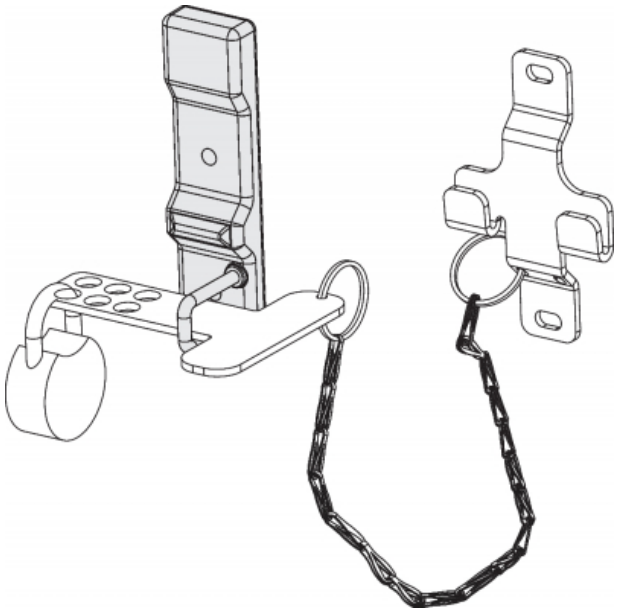

Bowden cable release ACC-AZM300-BOW-.-.M-.M (available as accessory)
Observe the additional notes in the operating instructions of the Bowden cable release.

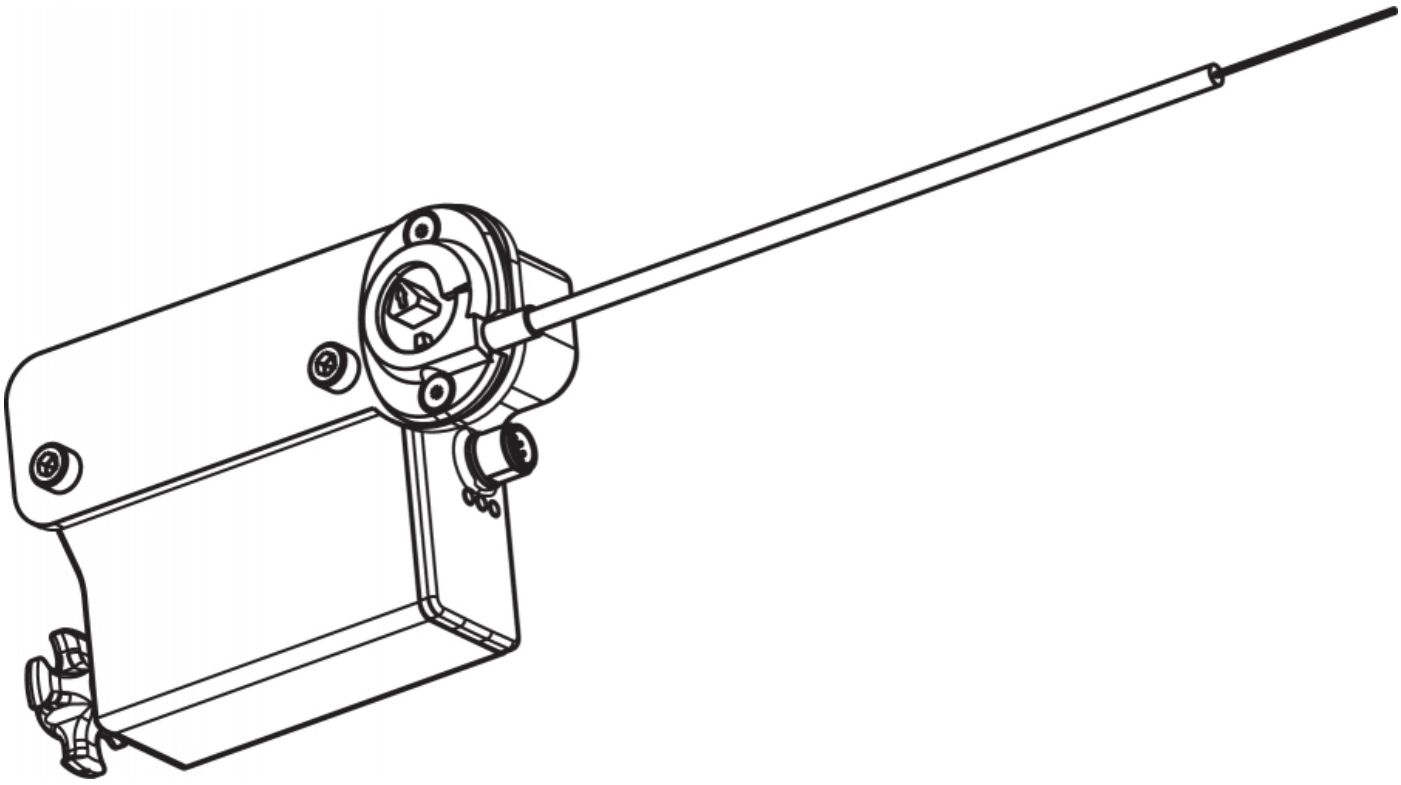

4 Electrical connection

4.1 General information for electrical connection

The electrical connection may only be carried out by authorised personnel in a de-energised condition.

The voltage inputs A1, X1, X2 and IN must have a protection against permanent overvoltage. Supply units according to EN 60204-1 is recommended.

The required electrical cable fuse protection must be integrated in the installation.

The safety outputs can be integrated into the safety circuit of the control system.

Requirements for the connected safety-monitoring module:
Dual-channel safety input, suitable for 2 p-type semi-conductor outputs

Configuration of the safety-monitoring module
If the safety sensor is connected to electronic safety-monitoring modules, we recommend that you set a discrepancy time of min. 100 ms. The safety inputs of the safety-monitoring module must be able blanking a test impulse of approx. 1 ms. The safety-monitoring module does not need to have a cross-wire short monitoring function, if necessary, the cross-wire short monitoring function must be disabled.

Information for the selection of suitable safety-monitoring modules can be found in the Schmersal catalogues or in the online catalogue on the Internet: products.schmersal.com

4.2 Serial diagnostic -SD

Cable design
The wiring capacity of the connecting cable of the solenoid interlock must not exceed 50 nF. Depending on the strand structure, normal unshielded 30 m long control cables LIYY 0.25 mm² to 1.5 mm² have a wiring capacitance of approx. 3 … 7 nF.

On wiring SD devices, please pay attention to the voltage drop on the cables and the current carrying capacity of the individual components.

Accessories for the series-wiring
For convenient wiring and series-wiring of SD components, the SD junction boxes PFB-SD-4M12-SD (variant for the field) and PDM-SD-4CC-SD (variant for control cabinet on carrier rail) are available along with additional comprehensive accessories. Detailed information is available on the Internet, products.schmersal.com.

4.3 Wiring examples for series-wiring

Series-wiring can be set up. In the case of a series connection, the risk time remains unchanged and the reaction time increases by the sum of the reaction time of the inputs per additional unit specified in the technical data. The quantity of devices is only limited by the cable drops and the external cable fuse protection, according to the technical data. Series-wiring of up to 31 AZM300 … SD components with serial diagnostics is possible.

The application examples shown are suggestions. They however do not release the user from carefully checking whether the switchgear and its set-up are suitable for the individual application. The application examples shown are suggestions.

Wiring example 1: Series-wiring of the AZM300 with conventional diagnostic output
The voltage is supplied at both safety inputs of the terminal safety component of the chain (considered from the safety-monitoring module). The safety outputs of the first safety component are wired to the safety-monitoring module.

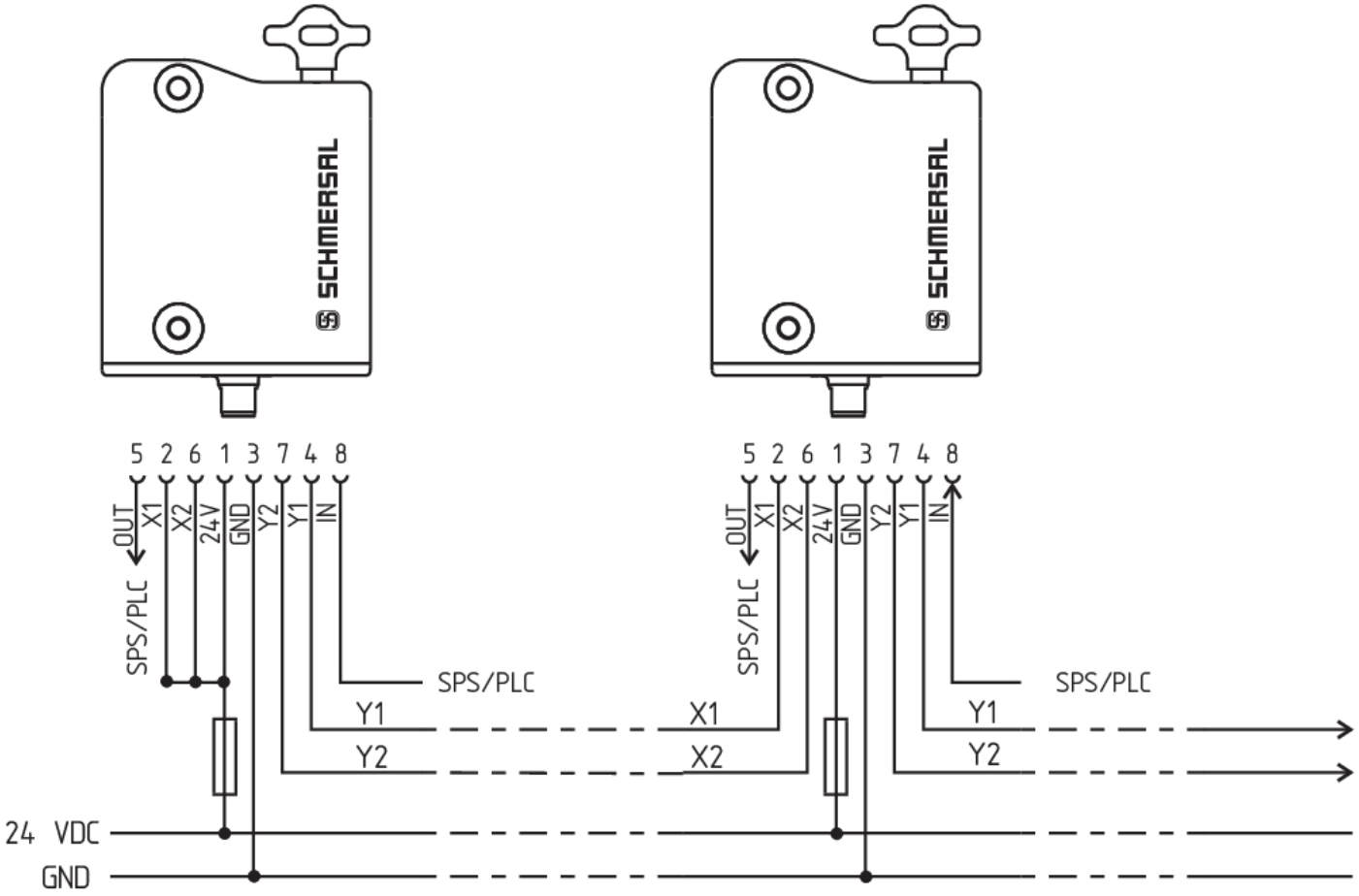

Y1 and Y2 = Safety outputs → Safety monitoring module

Wiring example 2: Series-wiring of the AZM300 with serial diagnostic function (max. 31 components in series)
In devices with the serial diagnostics function (ordering suffix -SD), the serial diagnostics connections are wired in series and connected to a SD-Gateway for evaluation purposes. The safety outputs of the first safety component are wired to the safety-monitoring module. The serial Diagnostic Gateway is connected to the serial diagnostic input of the first safety component.

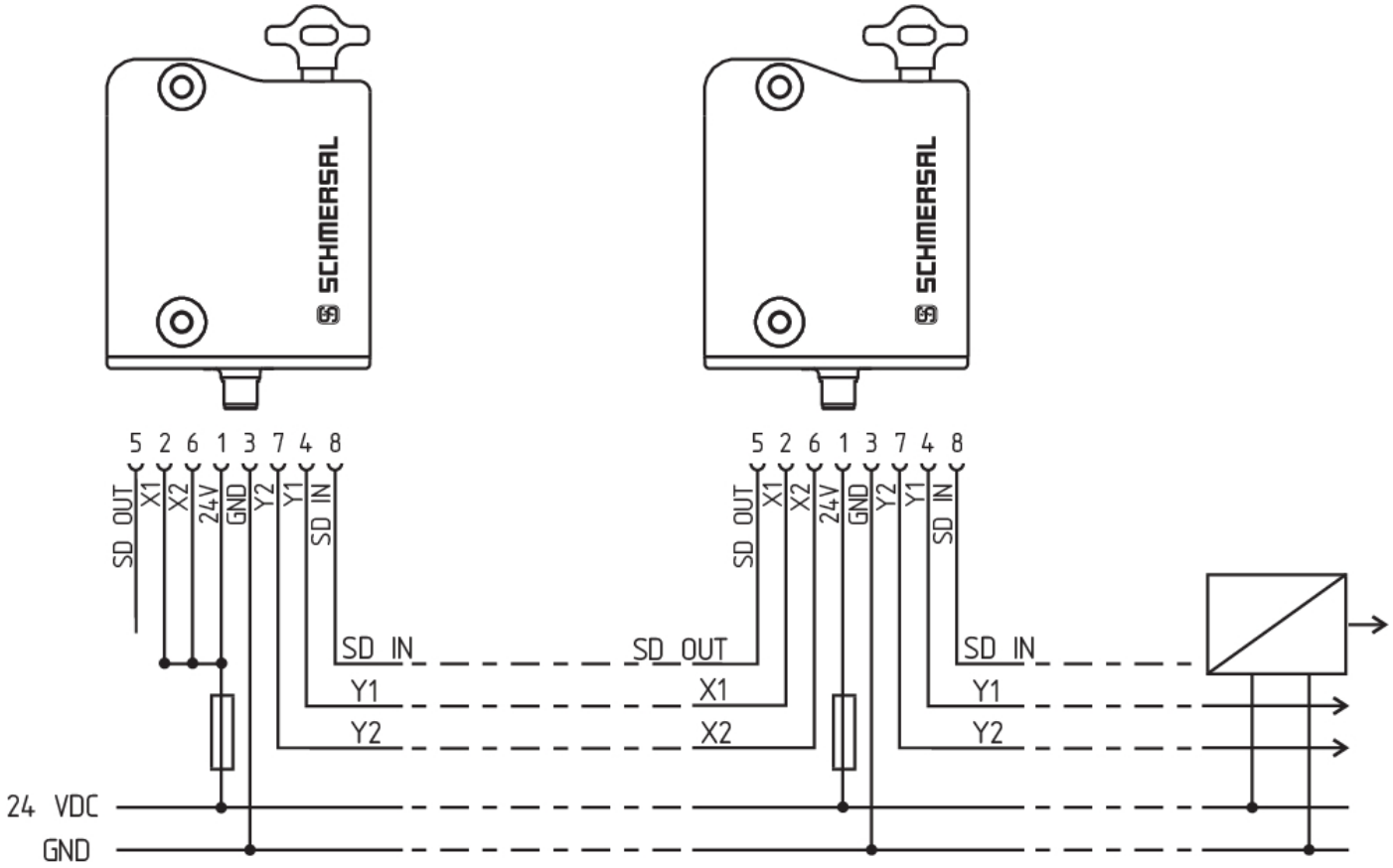

Y1 and Y2 = Safety outputs → Safety monitoring module
SD-IN → Gateway → Field bus

4.4 Wiring configuration and connector accessories

Function safety switchgear			Pin configuration of the connector	Colour codes of the Schmersal connectors		Poss. colour code of other commercially available connectors according to EN 60947-5-2
	With conventional diagnostic output	With serial diagnostic function		IP67 / IP69 to DIN 47100	IP69 (PVC)	
A1	Ue		1	WH	BN	BN
X1	Safety input 1		2	BN	WH	WH
A2	GND		3	GN	BU	BU
Y1	Safety output 1		4	YE	BK	BK
OUT	Diagnostic output	SD-output	5	GY	GY	GY
X2	Safety input 2		6	PK	VT	PK
Y2	Safety output 2		7	BU	RD	VT
IN	Solenoid control	SD-input	8	RD	PK	OR

Connecting cables with coupling (female) IP67 / IP69, M12, 8-pole - 8 x 0.25 mm² to DIN 47100	
Cable length	Ordering code
2,5 m	103011415
5,0 m	103007358
10,0 m	103007359
15,0 m	103011414

Connecting cables (PVC) with socket (female) M12, 8-pole - 8 x 0.21 mm², IP69	
Cable length	Ordering code
5.0 m	101210560
5.0 m, angled	101210561
10.0 m	103001389
15.0 m	103014823

5 Actuator coding and latching force adjustment

5.1 Actuator coding

Solenoid interlocks with standard coding are ready to use upon delivery.

Individually coded solenoid interlocks and actuators will require the following "teach-in" procedure:

1. Switch the solenoid interlock's voltage supply off and back on.
2. Introduce the actuator in the detection range. The teach-in procedure is signalled at the solenoid interlock, green LED off, red LED on, yellow LED flashes (1 Hz).
3. After 10 seconds, brief yellow cyclic flashes (3 Hz) request the switch-off of the operating voltage of the solenoid interlock. (If the voltage is not switched off within 5 minutes, the solenoid interlock cancels the "teach-in" procedure and signals a false actuator by 5 red flashes.)
4. Once the operating voltage is switched back on, the actuator must be detected once more in order to activate the actuator code that has been taught in. In this way, the activated code is definitively saved!

For ordering suffix -I1, the executed allocation of safety switchgear and actuator is irreversible.
For ordering suffix -I2, the "teach-in" procedure for a new actuator can be repeated an unlimited number of times. When a new actuator is taught, the code, which was applicable until that moment, becomes invalid. Subsequent to that, an enabling inhibit will be active for ten minutes, thus providing for an increased protection against tampering. The green LED will flash until the expiration of the time of the enabling inhibit and the detection of the new actuator. In case of power failure during the lapse of time, the 10-minutes tampering protection time will restart.

5.2 Latching force adjustment

In order to enable trouble-free functionality of the device, the rotary handle must be in position I or II when the safety guard is open. In the intermediate positions, locking is impossible. The latching force is changed by turning the rotary handle by 180° .
In position I,the latching force is approx. 25 N.
In position II, the latching force is approx. 50 N.

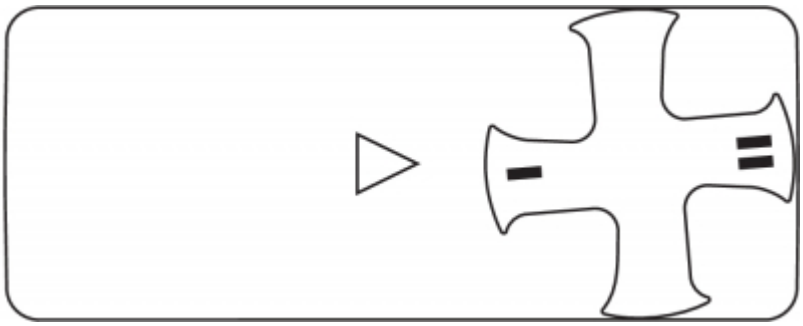

6 Active principle and diagnostic functions

6.1 Magnet control

In the power to unlock version of the AZM300, the solenoid interlock is unlocked when the IN signal (= 24V) is set.
In the power to lock version of the AZM300, the solenoid interlock is locked when the IN signal (= 24 V) is set.

6.2 Mode of operation of the safety outputs

In the standard AZM300Z variant, the unlocking of the solenoid interlock causes the safety outputs to be disabled. The unlocked safety guard can be relocked as long as the actuator is inserted in the AZM300Z solenoid interlock; in that case, the safety outputs are re-enabled.
It is not necessary to open the safety guard.
In the AZM300B version, only the opening of the safety guard causes the safety outputs to be disabled.

6.3 Diagnostic-LEDs

The solenoid interlock signals the operating condition, as well as errors through 3-colour LEDs.

green (Power)	Supply voltage on
yellow (Status)	Operating condition
red (Fault)	Error (see table 2: Error messages / flash codes red diagnostic LED)

System condition No input signal at X1 and/or X2	LED green	red	yellow
Safety guard open and a safety guard in the safety circuit upstream is also open	Flashes (1 Hz)	Off	Off
Safety guard closed and a safety guard in the safety circuit upstream is open	Flashes (1 Hz)	Off	Flashes
Safety guard locked and a safety guard in the safety circuit upstream is open	Flashes (1 Hz)	Off	On

6.4 Solenoid interlock with conventional diagnostic output

The short-circuit proof diagnostic output OUT can be used for central visualisation or control tasks, e.g. in a PLC.

The diagnostic output is not a safety-related output.

Error
Errors which no longer guarantee the function of the safety switchgear (internal errors) cause the safety outputs to be disabled within the duration of risk. After fault rectification, the error message is reset by opening and re-closing the corresponding safety guard.

Fault warning
A fault that does not immediately endanger the safety function of the safety switchgear (e.g. too high ambient temperature, safety output at external potential, cross-circuit) leads to delayed shutdown (see Table 2). This signal combination, diagnostic output disabled and safety channels still enabled, can be used to stop the production process in a controlled manner. An error warning is deleted when the cause of error is eliminated. If the fault warning remains on for 30 minutes, the safety outputs are also switched off (red LED flashes, see Table 2).

Behaviour of diagnosis output based on interlock with power to unlock as an example

Input signal magnet control

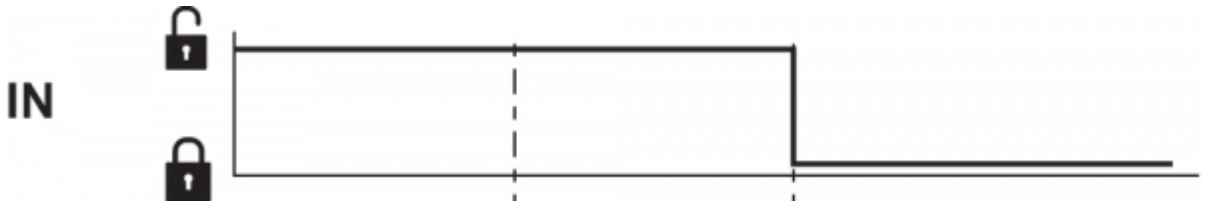

Normal sequence, door was locked

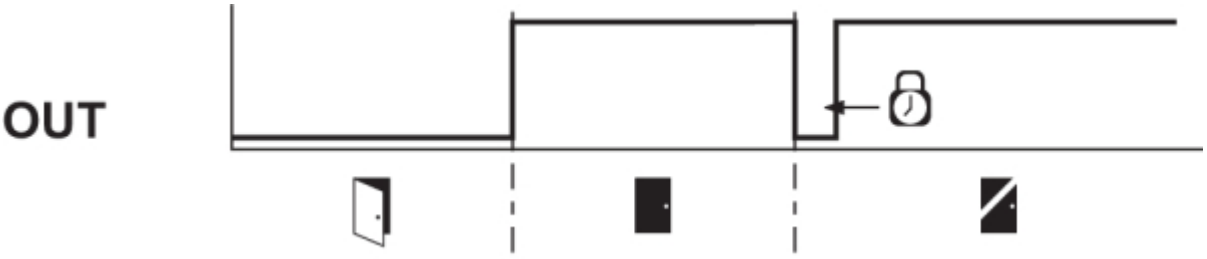

Door could not be locked or fault

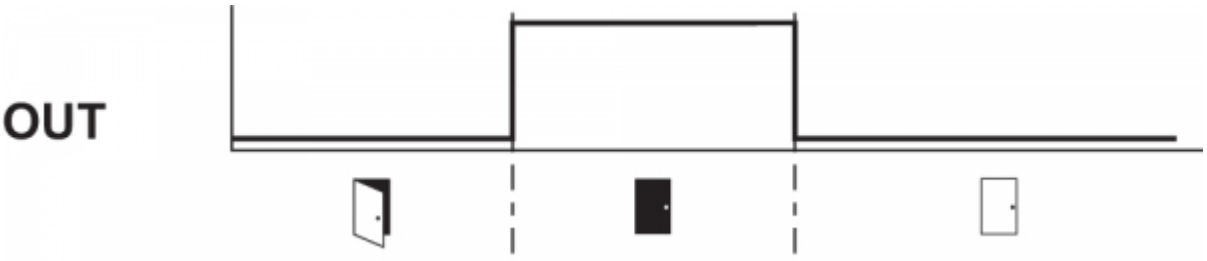

Legend

Safety guard open

Safety guard closed

Locking time

Safety guard not locked or fault

Safety guard locked

Lock

Unlock

Evaluation of diagnostic output

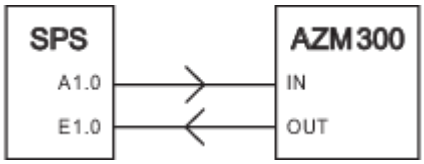

Power to unlock: IN = 0 = Lock

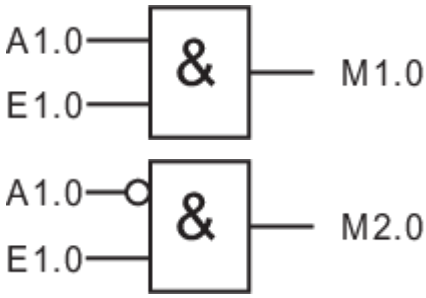

Safety guard can be locked

Safety guard locked

Power to lock: IN = 1 = Lock

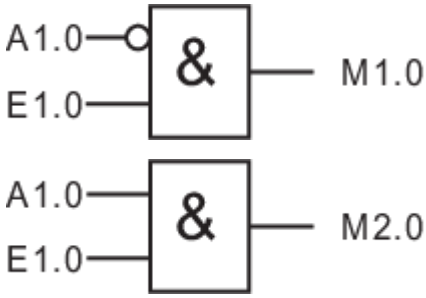

Safety guard can be locked

Safety guard locked

Table 1: Diagnostic information of the safety switchgear								
System condition	Magnet control IN		LED			Safety outputs Y1, Y2		Diagnostic output OUT
	Power to unlock	Power to lock	green	red	yellow	AZM300Z	AZM300B	
Safety guard open	24 V (0 V)	0 V (24 V)	On	Off	Off	0 V	0 V	0 V
Safety guard closed, **not locked**	24 V	0 V	On	Off	Flashes	0 V	24 V	24 V
Safety guard closed, **locking impossible**	0 V	24 V	On	Off	Flashes	0 V	24 V	0 V
Safety guard closed and locked	0 V	24 V	On	Off	On	24 V	24 V	24 V
Error warning [1]	0 V	24 V	On	Flashes[2]	On	24 V[1]	24 V[1]	0 V
Error	0 V (24 V)	24 V (0 V)	On	Flashes[2]	Off	0 V	0 V	0 V
No input signal at X1 and/or X2	0 V (24 V)	24 V (0 V)	Flashes	Off	Off	0 V	0 V	0 V
No input signal at X1 and/or X2	0 V (24 V)	24 V (0 V)	Flashes	Off	On/Flashes	0 V	0 V	24 V
Additionally for variant I1/I2:								
Teach-in procedure actuator started			Off	On	Flashes	0 V	0 V	0 V
Only I2: teach-in procedure actuator (release block)			Flashes	Off	Off	0 V	0 V	0 V

[1] after 30 min: disabling due to fault
[2] refer to flash code

Table 2: Error messages / flash codes red diagnostic LED			
Flash pulses (red)	Designation	Autonomous switch-off after	Error cause
1 flash pulse	Error (warning) at output Y1	30 min	Fault in output test or voltage at output Y1, although the output is disabled.
2 flash pulses	Error (warning) at output Y2	30 min	Fault in output test or voltage at output Y2, although the output is disabled.
3 flash pulses	Error (warning) cross-wire short	30 min	Cross-wire short between the output cables or fault at both outputs
4 flash pulses	Error (warning) temperature too high	30 min	The temperature measurement reveals an internal temperature that is too high
5 flash pulses	Actuator fault	0 min	Incorrect or defective actuator, bracket broken, Malfunction of the RFID signal
6 flash pulses	Fault rotary handle	0 min	Rotary handle not in authorised intermediate position
Continuous red signal	Internal error	0 min	Device defective

6.5 Solenoid interlock with serial diagnostic function SD

Solenoid interlocks with serial diagnostic cable have a serial input and output cable instead of the conventional diagnostic output. If solenoid interlocks are wired in series, the diagnostic data are transmitted through the series-wiring of the inputs and outputs.

Max. 31 solenoid interlocks can be wired in series. For the evaluation of the serial diagnostics line either the PROFIBUS-Gateway SD-I-DP-V0-2 or the Universal-Gateway SD-I-U-... are used. This serial diagnostic interface is integrated as slave in an existing field bus system. In this way, the diagnostic signals can be evaluated by means of a PLC.

The necessary software for the integration of the SD-Gateway is available for download at products.schmersal.com.

The response data and the diagnostic data are automatically and permanently written in an input byte of the PLC for each solenoid interlock in the series-wired chain. The request data for each solenoid interlock is transmitted to the component through an output byte of the PLC. In case of a communication error between the SD-gateway and the solenoid interlock, the switching condition of the solenoid interlock is maintained.

Error
Errors which no longer guarantee the function of the safety switchgear (internal errors) cause the safety outputs to be disabled within the duration of risk. The fault is reset, when the cause is eliminated and bit 7 of the request byte changes from 1 to 0 or the safety guard is opened. Faults at the safety outputs are only deleted upon the next release, as the fault rectification cannot be detected sooner.

Fault warning
A fault that does not immediately endanger the safety function of the safety switchgear (e.g. too high ambient temperature, safety output at external potential, cross-circuit) leads to delayed shutdown (see Table 2). This signal combination, diagnostic output disabled and safety channels still enabled, can be used to stop the production process in a controlled manner. An error warning is deleted when the cause of error is eliminated. If the fault warning remains on for 30 minutes, the safety outputs are also switched off (red LED flashes, see Table 2).

Diagnostic error (warning)
If an error (warning) is signalled in the response byte, detailed fault information can be read out.

Table 3: I/O data and diagnostic data (The described condition is reached, when Bit = 1)				
Bit n°	Call Byte	Response-Byte	Diagnostic error warning	Diagnostic error
Bit 0:	Magnet on, irrespective of power to lock or power to unlock principle	Safety output activated	Error output Y1	Error output Y1
Bit 1:	---	Safety guard closed AND locking/unlocking possible [1]	Error output Y2	Error output Y2
Bit 2:	---	Actuator detected and locked	Cross-wire short	Cross-wire short
Bit 3:	---	---	Temperature too high	Temperature too high
Bit 4:	---	Input condition X1 and X2	---	Incorrect or defective actuator, bracket broken, Malfunction of the RFID signal
Bit 5:	---	Valid actuator detected	Internal device error	Internal device error
Bit 6:	---	Error warning [2]	Communication error between the field bus Gateway and the safety switchgear	---
Bit 7:	Error reset	Error (enabling path switched off)	Rotary handle not in authorised intermediate position	Rotary handle not in authorised intermediate position

[1] The leading diagnosis message through bit 1 indicates whether locking or unlocking of the guard system is possible. The solenoid interlock cannot be unlocked if e.g. the door pulls the turret out of its rest position beyond the set latching force. This can occur if doors are heavily distorted or when pulling the door. The solenoid interlock can only be locked if the turret is in the rest position, i.e. the latching force is sufficient to pull the guard system into the correct position.
[2] after 30 min -> fault

7 Set-up and maintenance

The safety function of the safety components must be tested. In the case of correct installation and adequate use, the safety switchgear features maintenance-free functionality. A regular visual inspection and functional test, including the following steps, is recommended:

1. Check for a secure installation of the actuator and the solenoid interlock.
2. Check max. axial misalignment of actuator and solenoid interlock.
3. Check max. angular misalignment (see "Mounting" part).
4. Fitting and integrity of the cable connections.
5. Check the switch enclosure for damages.
6. Remove particles of dust and soiling.
7. For versions with emergency exit and emergency release the following should also be considered:
   - For versions with emergency exit it must be possible to open the guard system from within the hazardous area; it must not be possible that the guard system is blocked from the inside.
   - By operating the emergency release lever outside of the hazardous zone it must be possible to open the guard system.

⚠ Adequate measures must be taken to ensure protection against tampering either to prevent tampering of the safety guard, for instance by means of replacement actuators.

⚠ Damaged or defective components must be replaced.

8 Disassembly and disposal

8.1 Disassembly

The safety switchgear must be disassembled in a de-energised condition only.

8.2 Disposal

The safety switchgear must be disposed of in an appropriate manner in accordance with the national prescriptions and legislations.

シュメアザー株式会社, 〒222-0033 横浜市港北区新横浜3-9-5, 新横浜第3東昇ビル
データと詳細は完全にチェックされました。画像は元の画像と異なる場合があります。技術的なデータはマニュアルで見られます。技術的に変更されたり、エラーの可能性があります。
Generated on 2025/03/21 18:50