INSTRUÇÕES DE OPERAÇÃO E MONTAGEM

Sensor magnético de segurança BNS 260-02ZG-ST-L

Conteúdo

1 About this document
1.1 Function
1.2 Target group of the operating instructions: authorised qualified personnel
1.3 Explanation of the symbols used
1.4 Appropriate use
1.5 General safety instructions
1.6 Warning about misuse
1.7 Exclusion of liability
2 Product description
2.1 Ordering code
2.2 Special versions
2.3 Purpose
2.4 Technical Data
3 Mounting
3.1 General mounting instructions
3.2 Dimensions
3.3 Axial misalignment
3.4 Adjustment
4 Electrical connection
4.1 General information for electrical connection
4.2 Contact Options
4.3 Connector accessories
5 Set-up and maintenance
6 Disassembly and disposal
6.1 Disassembly
6.2 Disposal

1 About this document

1.1 Function

This document provides all the information you need for the mounting, set-up and commissioning to ensure the safe operation and disassembly of the switchgear. The operating instructions enclosed with the device must always be kept in a legible condition and accessible.

1.2 Target group of the operating instructions: authorised qualified personnel

All operations described in the operating instructions manual must be carried out by trained specialist personnel, authorised by the plant operator only.

Please make sure that you have read and understood these operating instructions and that you know all applicable legislations regarding occupational safety and accident prevention prior to installation and putting the component into operation.

The machine builder must carefully select the harmonised standards to be complied with as well as other technical specifications for the selection, mounting and integration of the components.

The information contained in this operating instructions manual is provided without liability and is subject to technical modifications.

1.3 Explanation of the symbols used

Information, hint, note: This symbol is used for identifying useful additional information.

Caution: Failure to comply with this warning notice could lead to failures or malfunctions.
Warning: Failure to comply with this warning notice could lead to physical injury and/or damage to the machine.

1.4 Appropriate use

The Schmersal range of products is not intended for private consumers.

The products described in these operating instructions are developed to execute safety-related functions as part of an entire plant or machine. It is the responsibility of the manufacturer of a machine or plant to ensure the correct functionality of the entire machine or plant.

The safety switchgear must be exclusively used in accordance with the versions listed below or for the applications authorised by the manufacturer. Detailed information regarding the range of applications can be found in the chapter "Product description".

1.5 General safety instructions

The user must observe the safety instructions in this operating instructions manual, the country specific installation standards as well as all prevailing safety regulations and accident prevention rules.

Further technical information can be found in the Schmersal catalogues or in the online catalogue on the Internet: products.schmersal.com.

1.6 Warning about misuse

In case of improper use or manipulation of the safety switchgear, personal hazards or damages to machinery or plant components cannot be excluded. There are no residual risks, provided that the safety instructions as well as the instructions regarding mounting, commissioning, operation and maintenance are observed.

1.7 Exclusion of liability

We shall accept no liability for damages and malfunctions resulting from defective mounting or failure to comply with the operating instructions manual. The manufacturer shall accept no liability for damages resulting from the use of unauthorised spare parts or accessories.

For safety reasons, invasive work on the device as well as arbitrary repairs, conversions and modifications to the device are strictly forbidden, the manufacturer shall accept no liability for damages resulting from such invasive work, arbitrary repairs, conversions and/or modifications to the device.

2 Product description

2.1 Ordering code

Product type description: BNS 260-(1)(2)Z(3)-(4)-(5)

(1)	
11	1 NO contact/1 NC contact
02	2 NC contact

(2)	
without	without diagnostic output
/01	1 NC contact

(3)	
without	without LED switching conditions display
G	with LED switching conditions display

(4)	
without	Pre-wired cable
ST	with connector

(5)	
L	Door hinge on left-hand side
R	Door hinge on right-hand side

2.2 Special versions

For special versions, which are not listed in the ordering code, these specifications apply accordingly, provided that they correspond to the standard version.

2.3 Purpose

The safety sensor BNS 260 is designed to monitor the position of movable safetey guards in safety circuits to EN ISO 14119 and EN 60947-5-3. To actuate the safety sensors, only the BPS 260-1 or BPS 260-2 actuators can be used.

The safety switches are used for applications, in which the hazardous situation is terminated without delay when the safety guard is opened.

The safety switchgears are classified according to EN ISO 14119 as type 4 interlocking devices.

Only the entire system consisting of the BNS 260 safety sensor and the BPS 260-1 or BPS 260-2 actuator and the safety-monitoring module (SRB) meets the requirements of the standard EN 60947-5-3.

The user must evaluate and design the safety chain in accordance with the relevant standards and the required safety level.

The entire concept of the control system, in which the safety component is integrated, must be validated to the relevant standards.

2.4 Technical Data

Homologações - Instruções

PNV_NORM_CERTIFICATION	cULus

Propriedades globais

NORM_STANDARD	BG-GS-ET-14 EN IEC 60947-5-3
CODE_CODING_LEVEL_ISO14119	baixa
DESIGN_ACTIVE_PRINCIPLE	Transmissão magnética
DESIGN_INST_CONDIT	quase-flush
MAT_HOUSING	Plástico, termoplástico reforçado com fibra de vidro
SAP_WEIGHT_GROSS	32

Propriedades globais - Características

YN_CODING	Sim
YN_INTEGR_DISPLAY_STATUS	Sim

NUM_OF_NC	2
NUM_OF_SAFE_CONT	2

Classificação

SAFE_NORM_STANDARD	EN ISO 13849-1
SAFE_MISSION_TIME	20

Classificação - saídas de segurança

SAFE_B10D_NC_SOUT	25 000 000
SAFE_B10D_NC_NO_SOUT	25 000 000

Dados mecânicos

DESIGN_ACT_ELEMENT	Íman
DESIGN_DOOR_HINGE	À esquerda
MOTION_DIRECTION	Frontal à área ativa

Mechanical data - Switching distances

NOTE_DIM_RANGE_SWITCH_DIST	Desnível axial, sensor de segurança e o atuador toleram um deslocamento horizontal e vertical entre si.. O deslocamento possível depende da distância das superfícies ativas do sensor e do atuador. Dentro da gama de tolerância o sensor está ativo.
DIM_RANGE_SWITCH_DIST_ON	5
DIM_RANGE_SWITCH_DIST_OFF	15
NOTE_DIM_RANGE_SWITCH_DIST_GENERAL	All switching distances in accordance EN IEC 60947-5-3

Dados mecânicos - Tecnologia conectiva

REVIEW_ELEC_WIRING_GENERAL	Conector M8
TRQ_TIGHTEN_ELEC_WIRING	0,3

Dados mecânicos - dimensões

DIM_LENGTH_SENSOR	13
DIM_WIDTH_SENSOR	26
DIM_HEIGHT_SENSOR	36

Ambiente

DESIGN_IP_CLASS_GENERAL	IP67

TEMP_AMB_GPV	-25 ... +70 °C
TEMP_STORAGE_AND_TRANSPORT_GPV	-25 ... +70 °C
REVIEW_RESIST_VIBRAT_EN60068_2_6	10 ... 55 Hz, amplitude 1 mm
REVIEW_RESTIST_TO_SHOCK	30 g / 11 ms

Ambiente - Parâmetros de isolamento

VOLT_RATED_INSULAT	75 VDC
VOLT_RATED_IMPULSE_WITHSTAND	0,8

Dados elétricos

CURR_REQUIRED_RATED_SHORT_CIRCUIT	100
VOLT_SWITCH_DC_MAX	24
CURR_SWITCH_MAX	0,01
PWR_SWITCH_CPTY_W_MAX	0,24
REVIEW_DESIGN_SWITCH_ELEMENT	2 contactos normalmente fechados (NF)
TIME_SWITCH_FREQ_MAX	5

Indicação de estado

NOTE_YN_INTEGR_DISPLAY_STATUS	LED aceso, quando a porta de proteção está fechada

Exemplo de comutação

NOTE_WIRING_DIAG	Os contactos S11-S12 e S21-S22 terão de ser integrados no circuito de segurança.

Note about the safety classification

For 2-channel use with suitable logic, can be used up to Cat. 4 / PL e.

$$MTTF_D = \frac{B_{10D}}{0{,}1 \times n_{op}} \qquad n_{op} = \frac{d_{op} \times h_{op} \times 3600\ s/h}{t_{cycle}}$$

(Determined values can vary depending on the application-specific parameters h_{op}, d_{op} and t_{cycle} as well as the load.)

If multiple safety components are wired in series, the Performance Level to EN ISO 13849-1 will be reduced due to the restricted error detection under certain circumstances.

UL notice

For use in NFPA 79 Applications. Adapters providing field wiring means are available from the manufacturer. Refer to manufacturers information.

3 Mounting

3.1 General mounting instructions

During fitting, the requirements of EN ISO 14119 must be observed.

- Fitting is only authorised in a de-energised condition
- Do not use the sensor and the actuator as a mechanical backstop
- Any mounting position, provided that the active surfaces are opposite
- Do not subject the safety sensor and actuator to extreme vibrations and shocks

To avoid any interference inherent to this kind of system and any reduction of the switching distances, please observe the following guidelines:
- Ensure the safety sensor is mounted on a flat surface
- Do not install the safety sensor and the actuator in strong magnetic fields
- If possible, do not mount the sensor and the actuator on ferromagnetic material. A non-magnetic spacer of at least 5 mm thick or the original spacer must be used. The use of non-magnetic fixing screws is recommended also.
- Keep away from metal chips
- The mounting distance between two sensors should always be at least 50 mm

The actuator must be permanently fitted to the safety guards and protected against displacement by suitable measures (tamperproof screws, gluing, drilling of the screw heads).

3.2 Dimensions

All measurements in mm.

Sensor with connector, right hinged door

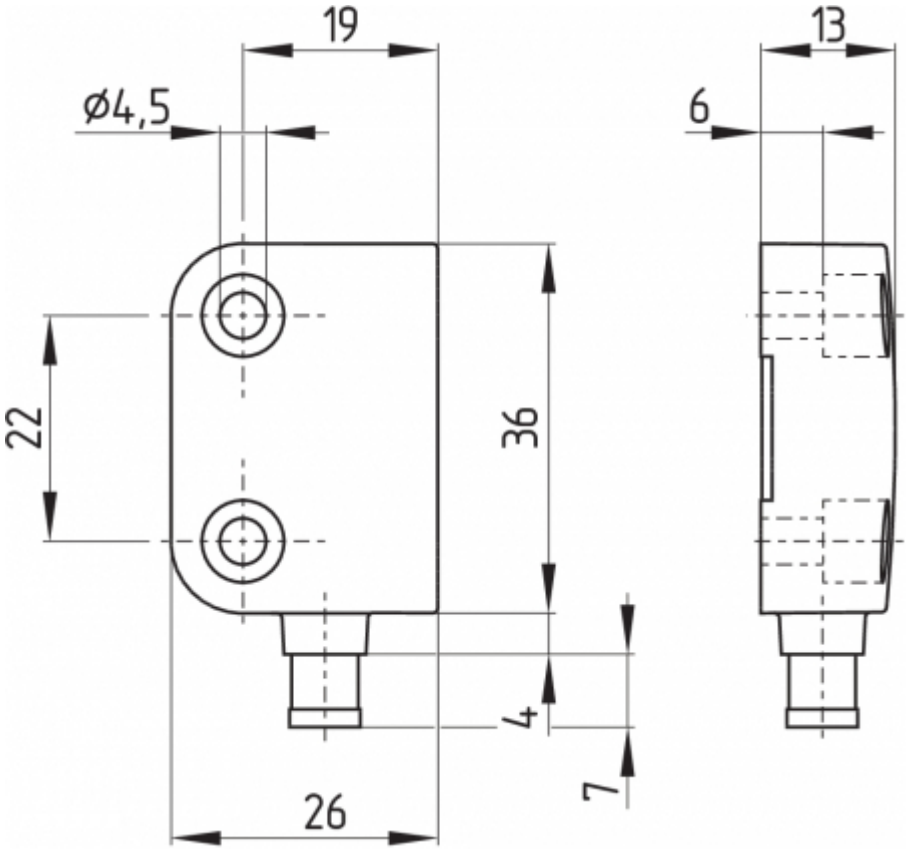

Safety sensor with cable, left hinged door

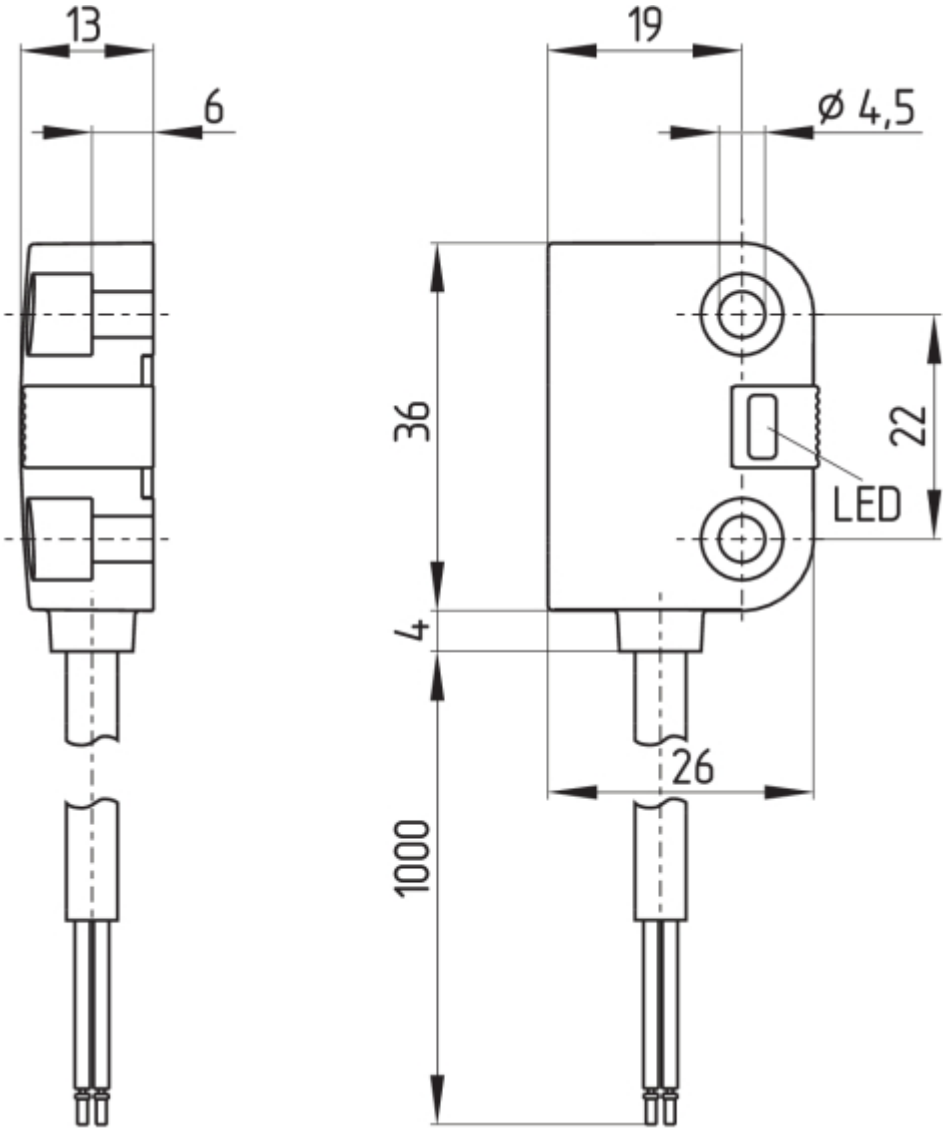

Actuator

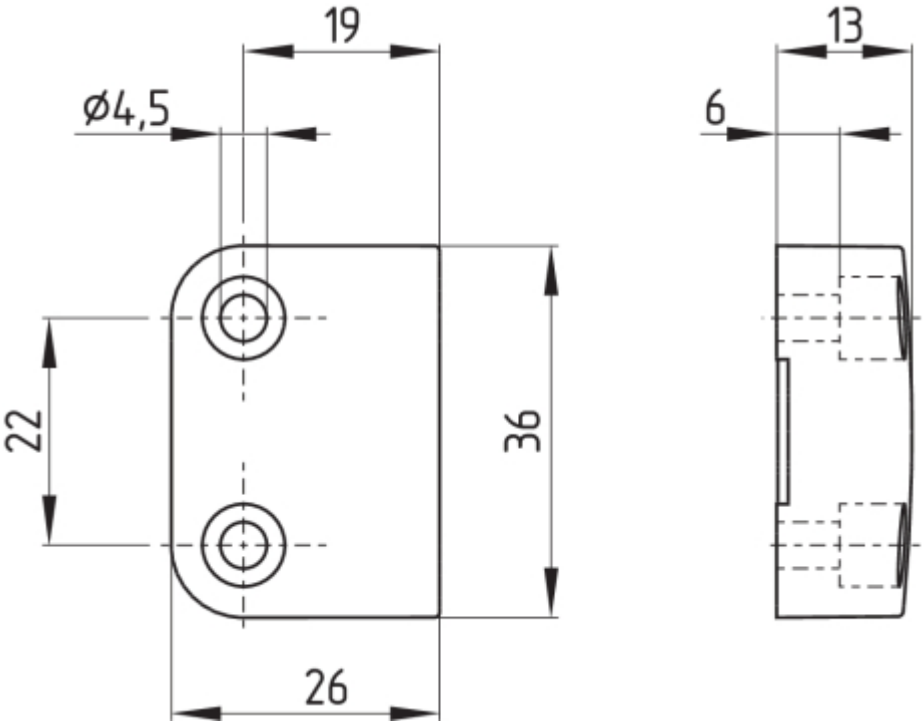

3.3 Axial misalignment

A horizontal and vertical misalignment of the safety sensor and the actuator is tolerated. The possible misalignment depends on the distance of the active surfaces of the sensor and the actuator. The sensor remains active within the tolerance range.

The specified switching distances refer to opposedly mounted safety sensors and actuators.

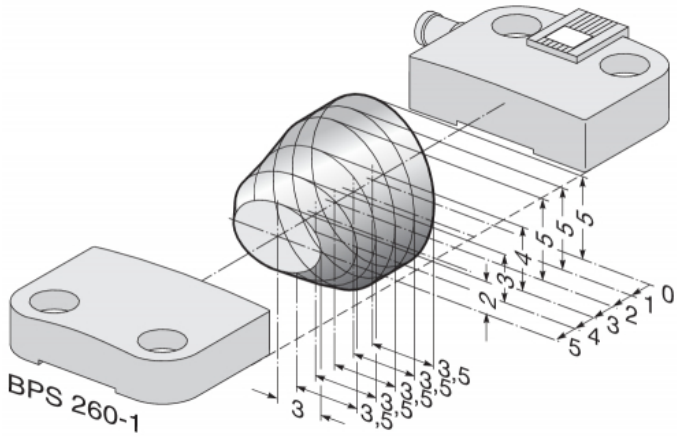

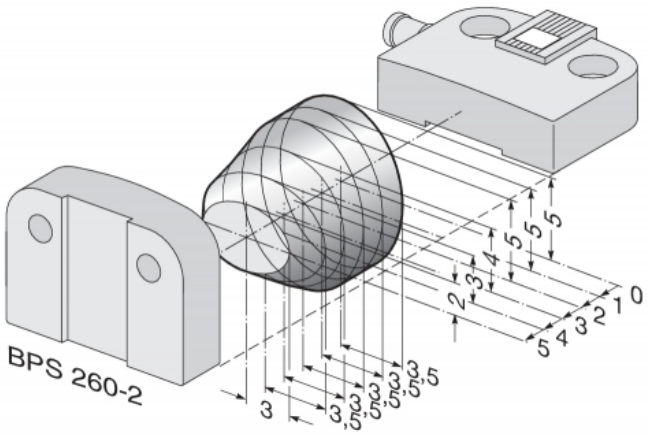

Assured switching distance:	s_{ao}	=	5 mm 8 mm (ordering suffix -2750)
Assured switch-off distance:	s_{ar}	=	15 mm 18 mm (ordering suffix -2750)

3.4 Adjustment

Recommended Adjustment
Align the safety sensor and actuator at a distance of 0.5 x s_{ao}.

Align the central markings of the safety sensor and the actuator with each other. The LED can only be used as rough setting tool. The correct functionality of both safety channels must be checked by means of the connected safety-monitoring module.

4 Electrical connection

4.1 General information for electrical connection

The electrical connection may only be carried out by authorised personnel in a de-energised condition.

Connecting multiple safety sensors to one SRB safety-monitoring module is technically possible. To connect multiple safety sensors (check if authorised!), their NO contacts are wired in parallel and their NC contacts in series. The Protect-IE-11 or -02 or PROTECT-PE-11 (-AN) or -02 input expander module can be used to connect up to 4 safety sensors with NC/NC or NC/NO contacts.

Safety sensors equipped with LED's shall not be wired in series, except for the PROTECT-IE or PROTECT-PE input expander module. As a result of this, the luminosity of the LEDs would considerably decrease and the voltage could drop below the minimum input voltage of the downstream safety-monitoring module.

Information for the selection of suitable safety-monitoring modules can be found in the Schmersal catalogues or in the online catalogue on the Internet: products.schmersal.com

4.2 Contact Options

The safety sensors must be wired in accordance with the wire colours or the pin configuration.

The contact position shows the actuated sensor function when the safety guard is closed. For safety sensors with LED, the LED is illuminated when the safety guard is closed. The contact configurations of the versions with or without LED are identical.

Safety contacts:	S21-S22 and S11-S12 or S13-S14
Signalling contact:	S31-S32

The numbers between brackets indicate the PIN configuration of the versions with connector plug or connecting cable with connector; indication of the wire colours for the version with cable.

BNS 260-02Z(G)	BNS 260-11Z(G)
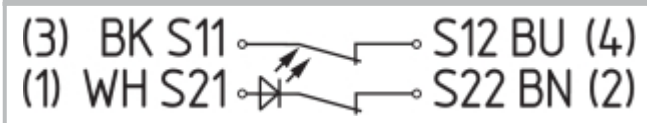	

BNS 260-02/01Z(G)	BNS 260-11/01Z(G)
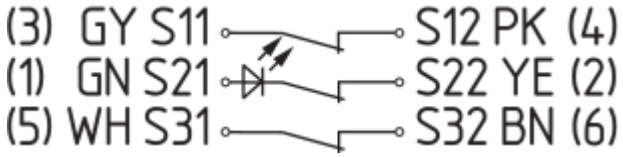	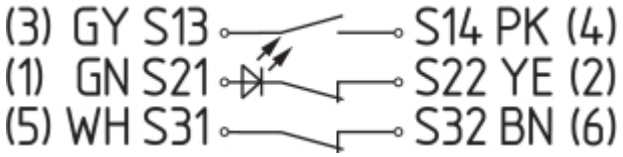

4.3 Connector accessories

Connector plug or cable connector		
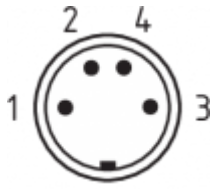	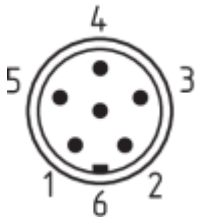	
M8, 4-pole, with screw terminal or snap fitting	8 mm, 6-pole, with snap fitting	M12, 4-pole, screw connection with vibration safeguard

Accessories: connecting cable with coupling

M8, 4-pole, with screw terminal				2 m	5 m	10 m
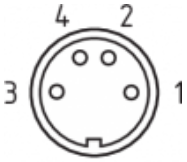	1	BN	straight	103011340	103007356	-
	2	WH				
	3	BU	angled	101210557	101210559	-
	4	BK				

8 mm, 6-pole, with snap fitting				2 m	5 m	10 m
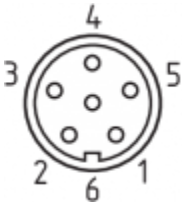	1	GN	straight	101206010	101206011	101206012
	2	YE				
	3	GY				
	4	PK	angled	101206013	101206014	101206015
	5	WH				
	6	BN				

M12, 4-pole, with screw terminal				2 m	5 m	10 m
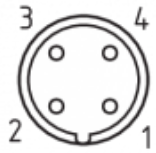	1	BN	Straight	103010891	103010892	103010893
	2	WH				
	3	BU				
	4	BK				

Accessory: Y-adapter BNS-Y-11

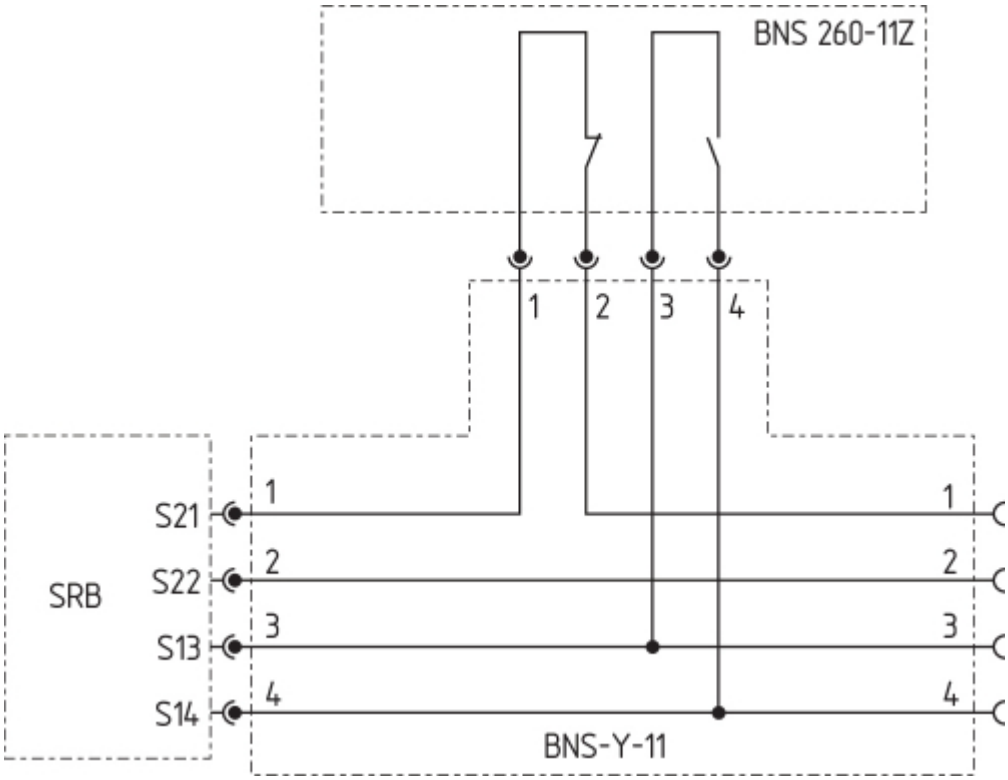

Accessory: Y-adapter BNS-Y-02

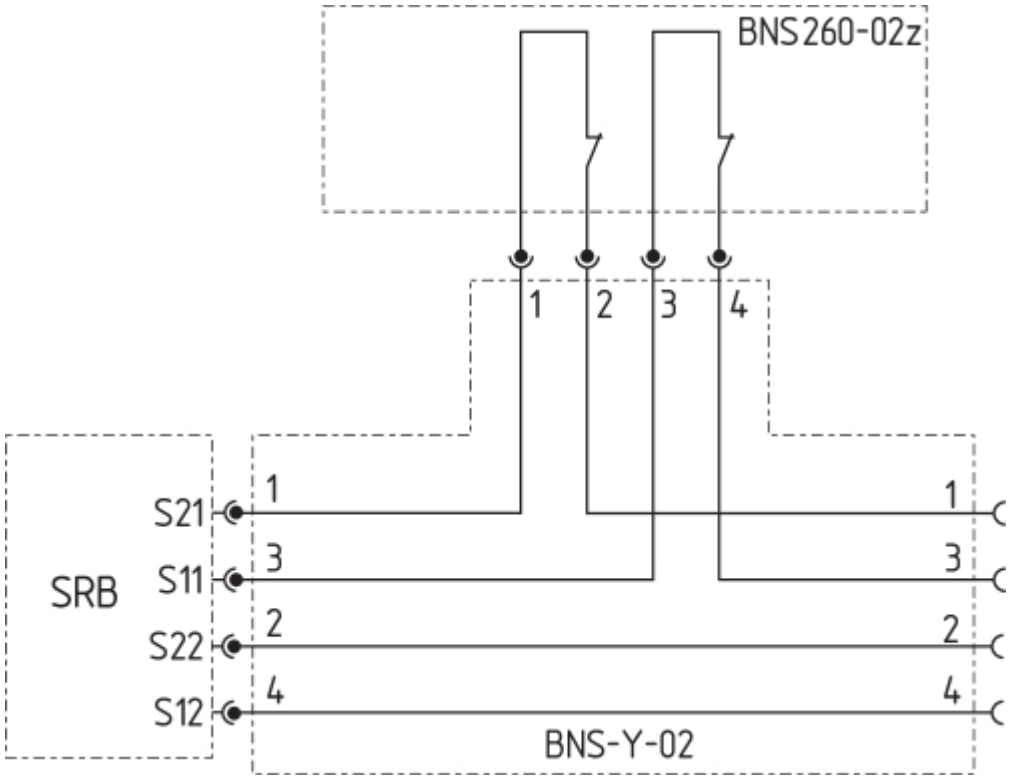

5 Set-up and maintenance

The safety function of the safety components must be tested. In the case of correct installation and adequate use, the safety switchgear features maintenance-free functionality. A regular visual inspection and functional test, including the following steps, is recommended:

1. Check fixation of the safety switch and the actuator.
2. Fitting and integrity of the cable connections.
3. The system is free of dirt and soiling (in particular metal chips).

Adequate measures must be taken to ensure protection against tampering either to prevent tampering of the safety guard, for instance by means of replacement actuators.

Damaged or defective components must be replaced.

6 Disassembly and disposal

6.1 Disassembly

The safety switchgear must be disassembled in a de-energised condition only.

6.2 Disposal

The safety switchgear must be disposed of in an appropriate manner in accordance with the national prescriptions and legislations.

ACE Schmersal Eletroeletrônica Ind. Ltda, Av. Brasil, nº 815, Jardim Esplanada – CEP 18557-646 Boituva/SP
Os dados e informações fornecidas foram cuidadosamente verificados. No entanto as imagens podem divergir do original. Informações técnicas adicionais podem ser encontradas no manual. Alterações técnicas e erros são possíveis.
Gerado em 31/05/2025 13:33